OWNER'S MANUAL

CL-3601

AB CRUNCH

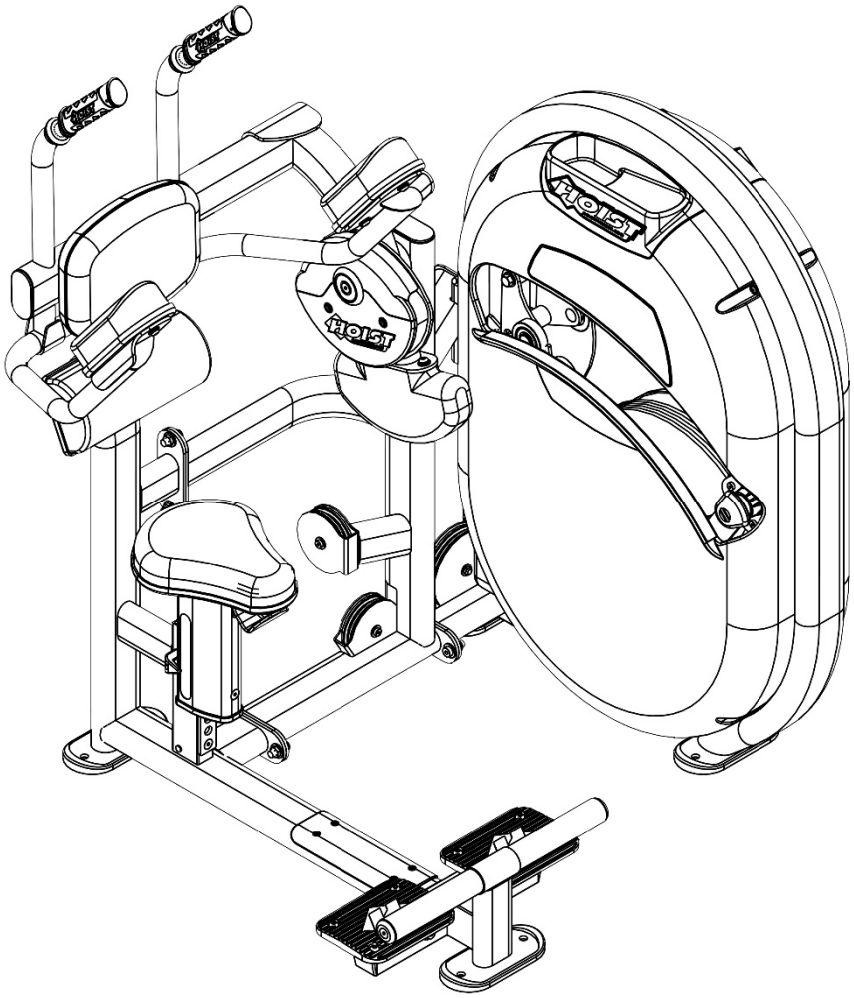

****WARNING!****

TO PREVENT POSSIBLE TIPPING, BOLT THIS UNIT TO THE EXERCISE FLOOR USING MINIMUM 4-1/2" LENGTH BOLTS. FAILURE TO DO SO MAY RESULT IN SERIOUS INJURY OR DEATH.

Note: Both Serial Number and Model Number are Required when Ordering Parts

RECORD SERIAL NUMBER HERE

MACHINE CODE

A01

Customer Service

(800) 548-5438

(858) 578-7676

Fax

(858) 578-9558

www.facebook.com/hoistfitness

CONTENTS

INSTRUCTIONS..... 02

FRAME ASSEMBLY..... 04

PRE-ASSEMBLY..... 19

DECAL PLACEMENT..... 23

DECAL REFERENCE..... 24

PART LIST..... 25

ABBREVIATIONS..... 28

BOLT SIZING CHART..... 29

WASHER SIZING CHART..... 30

MAINTANENCE SCHEDULE..... 32

GENERAL MAINTANENCE INFORMATION..... 33

WEIGHT TRAINING TIPS..... 34

EXERCISE LOG..... 36

LIMITED WARRANTY..... 37

INSTRUCTIONS

Before beginning assembly please take the time to read instructions thoroughly. Please use the various lists in this manual to make sure that all parts have been included in your shipment. When ordering, use part number and description from the lists. Use only HOIST replacement parts when servicing. Failure to do so will void your warranty and could result in personal injury.

HOIST equipment is designed to provide the smoothest, most effective exercise motion possible. After assembly, you should check all functions to ensure correct operation. If you experience problems, first recheck the assembly instructions to locate any possible errors made during assembly. If you are unable to correct the problem, call your authorized HOIST dealer. Be sure to have your serial number and this manual when calling. When all parts have been accounted for, continue on.

TOOLS REQUIRED

Ratchet Wrench

1/2", 9/16" and 3/4" Sockets

Adjustable Wrench

Rubber Mallet

Tape Measure

Level

SAE Hex Key Wrench Set

Two People

THIS PAGE WAS INTENTIONALLY LEFT BLANK

FRAME ASSEMBLY

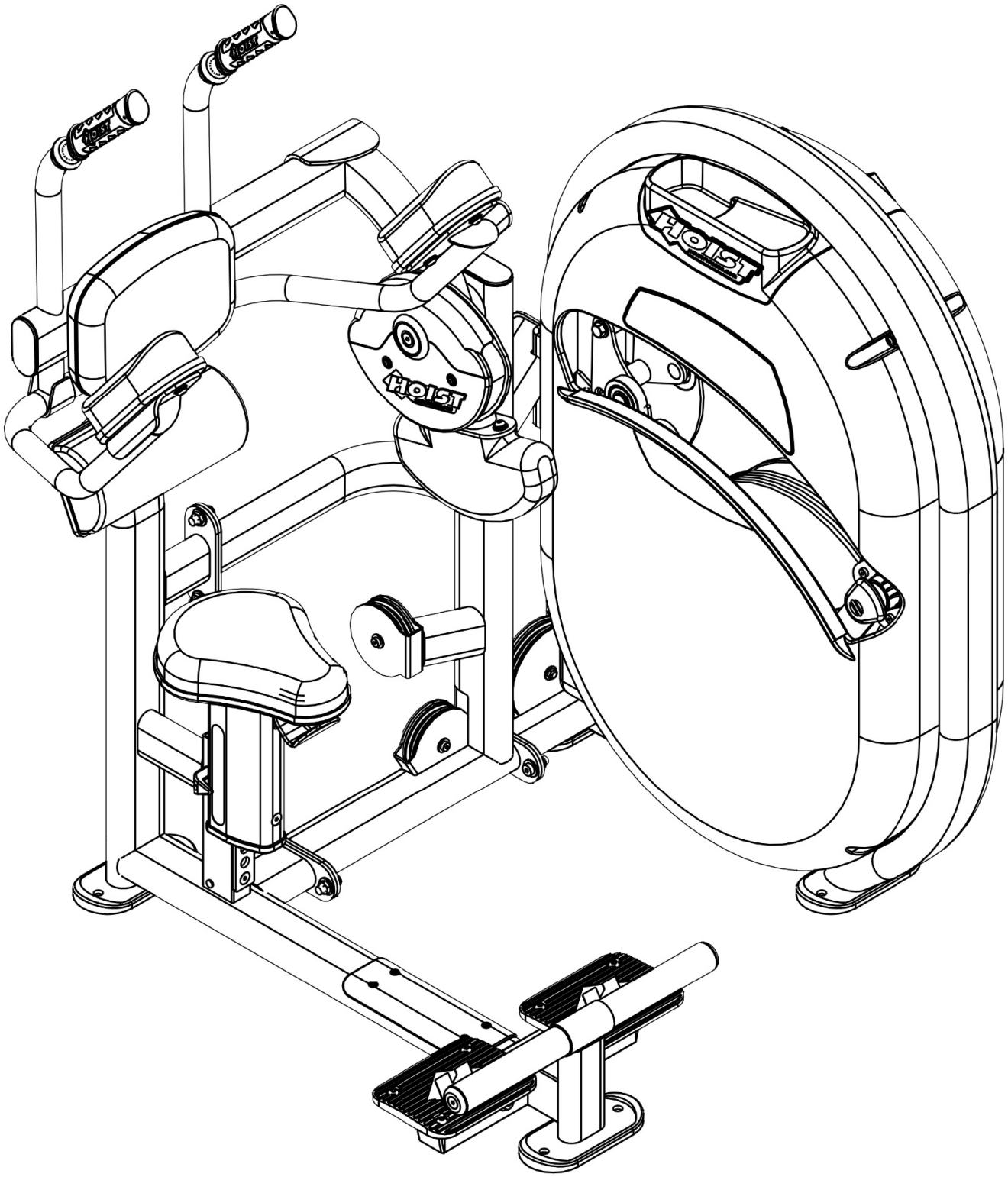

FRAME ASSEMBLY

NOTE:
- HAND TIGHTEN HARDWARE.
- SOME PARTS MAY HAVE BEEN REMOVED FOR CLARITY.

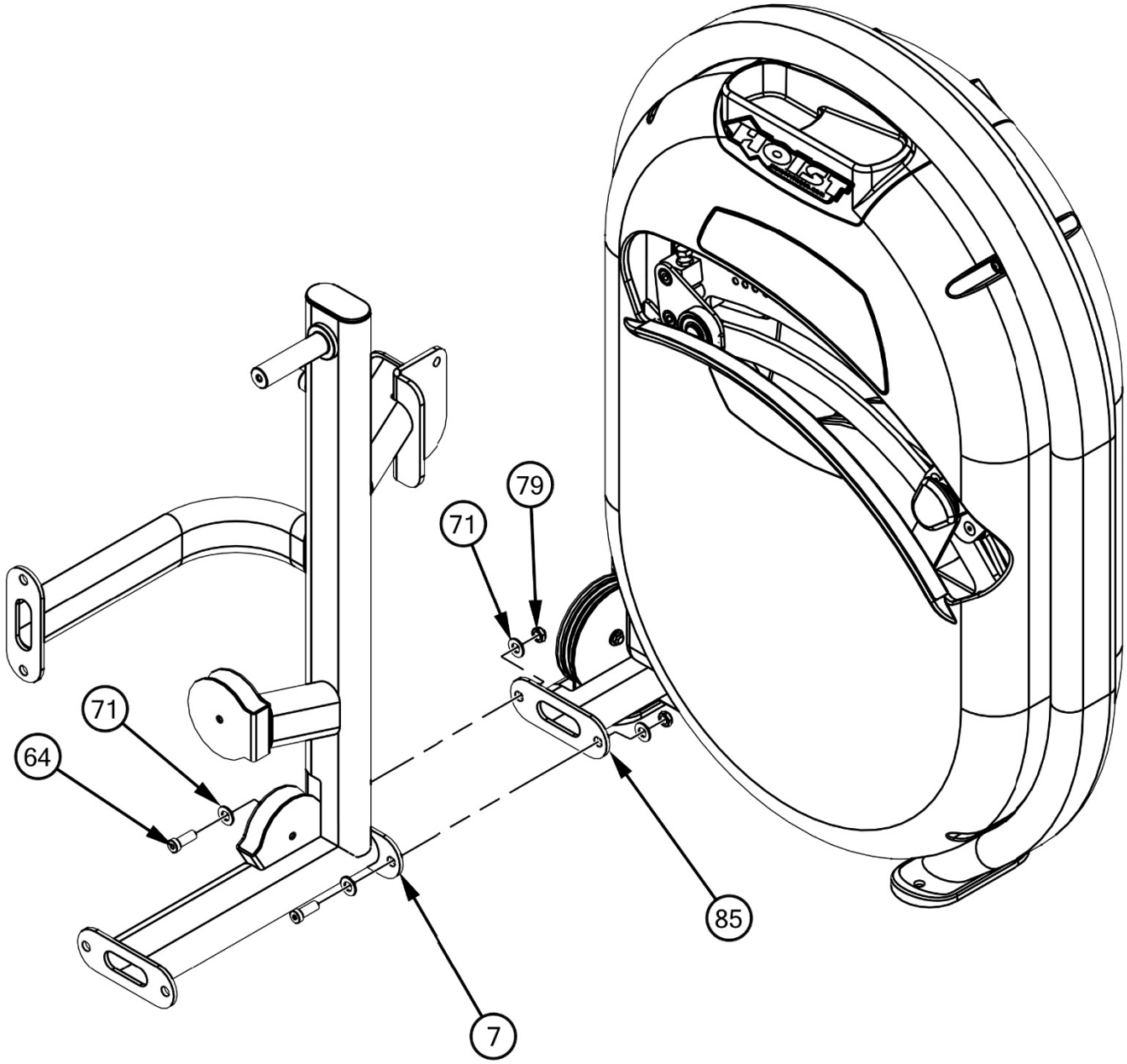

FRAME ASSEMBLY

NOTE:
- HAND TIGHTEN HARDWARE.
- SOME PARTS MAY HAVE BEEN REMOVED FOR CLARITY.

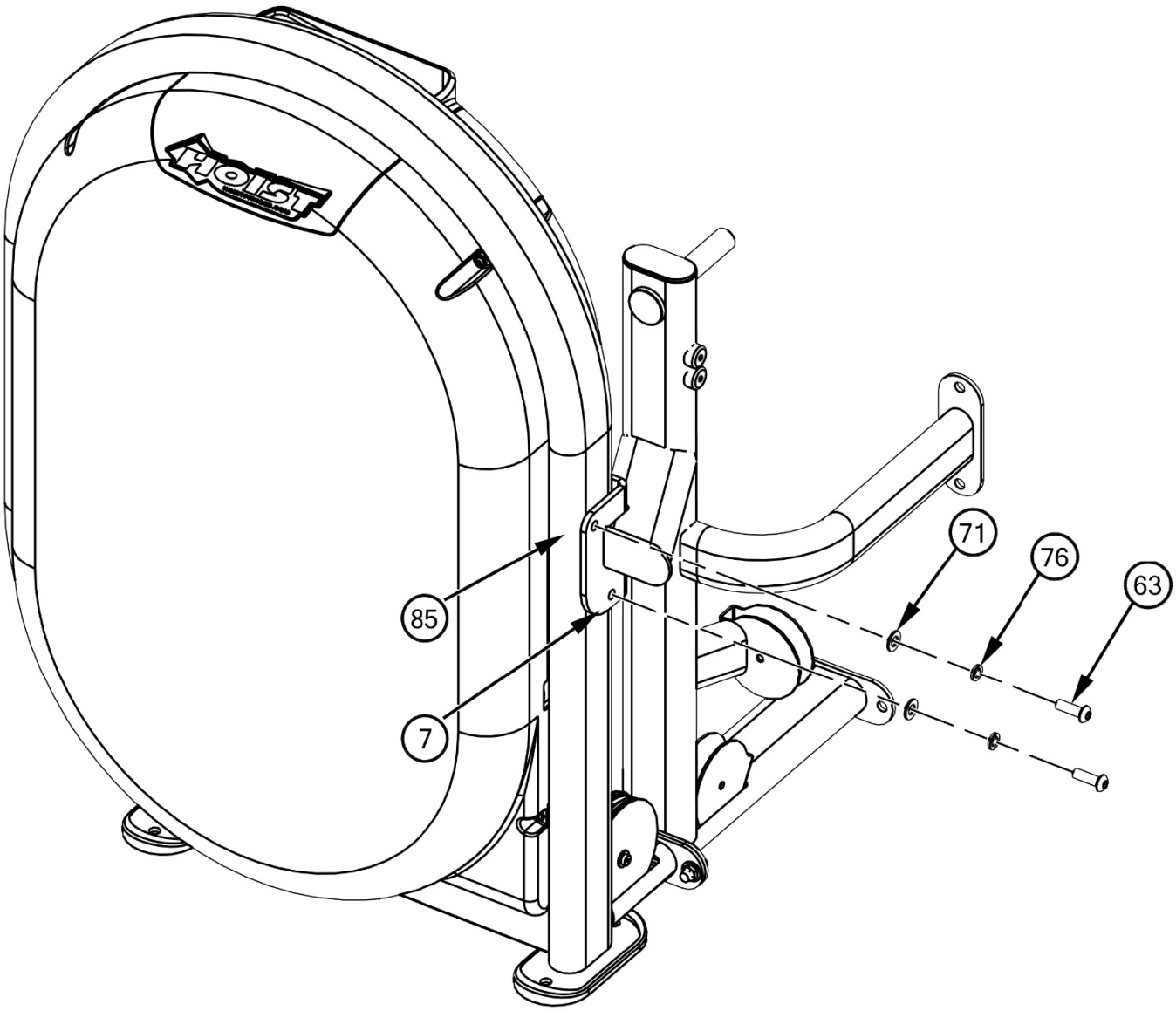

FRAME ASSEMBLY

NOTE:
- HAND TIGHTEN HARDWARE.
- SOME PARTS MAY HAVE BEEN REMOVED FOR CLARITY.

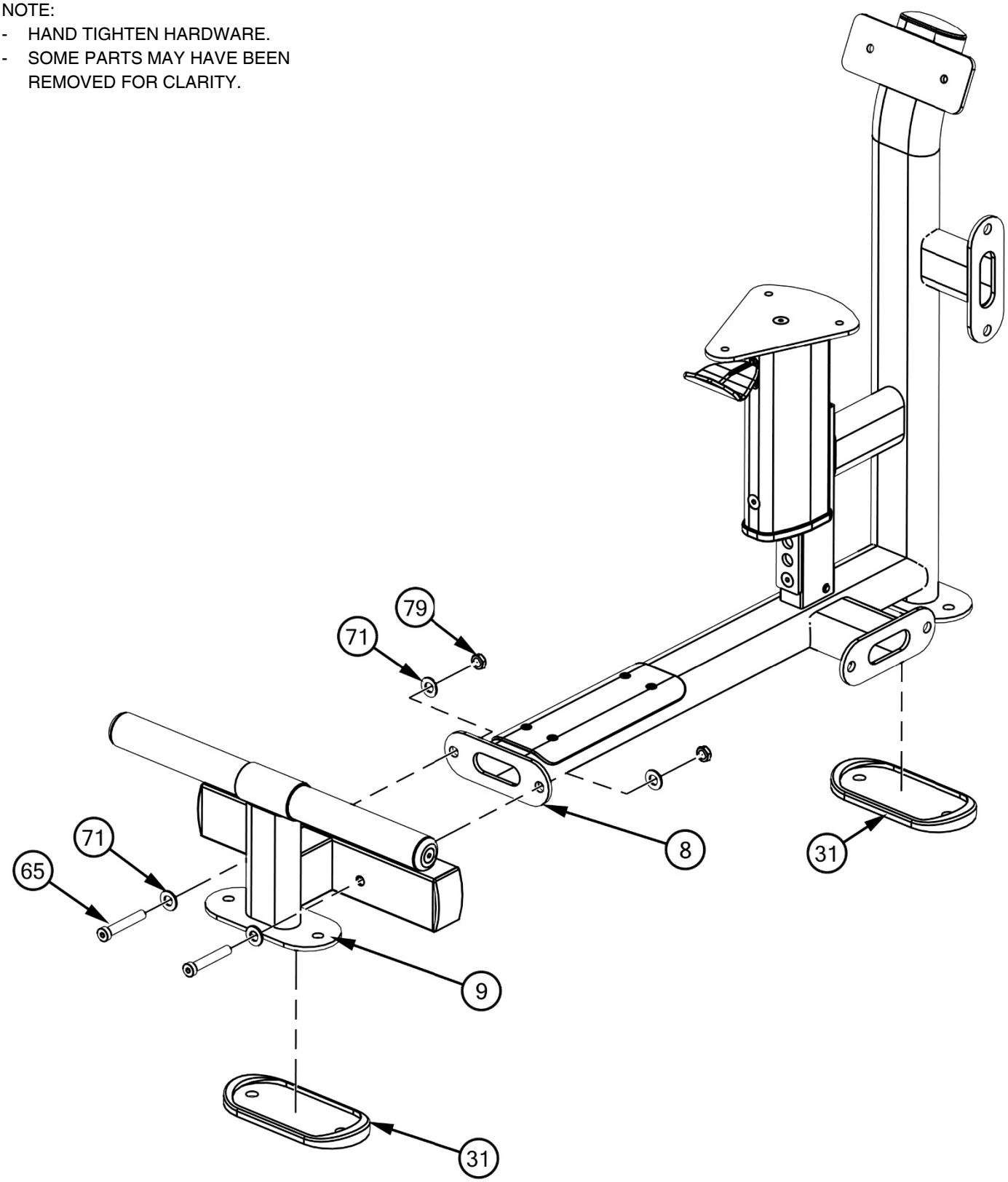

FRAME ASSEMBLY

NOTE:
- HAND TIGHTEN HARDWARE.
- SOME PARTS MAY HAVE BEEN REMOVED FOR CLARITY.

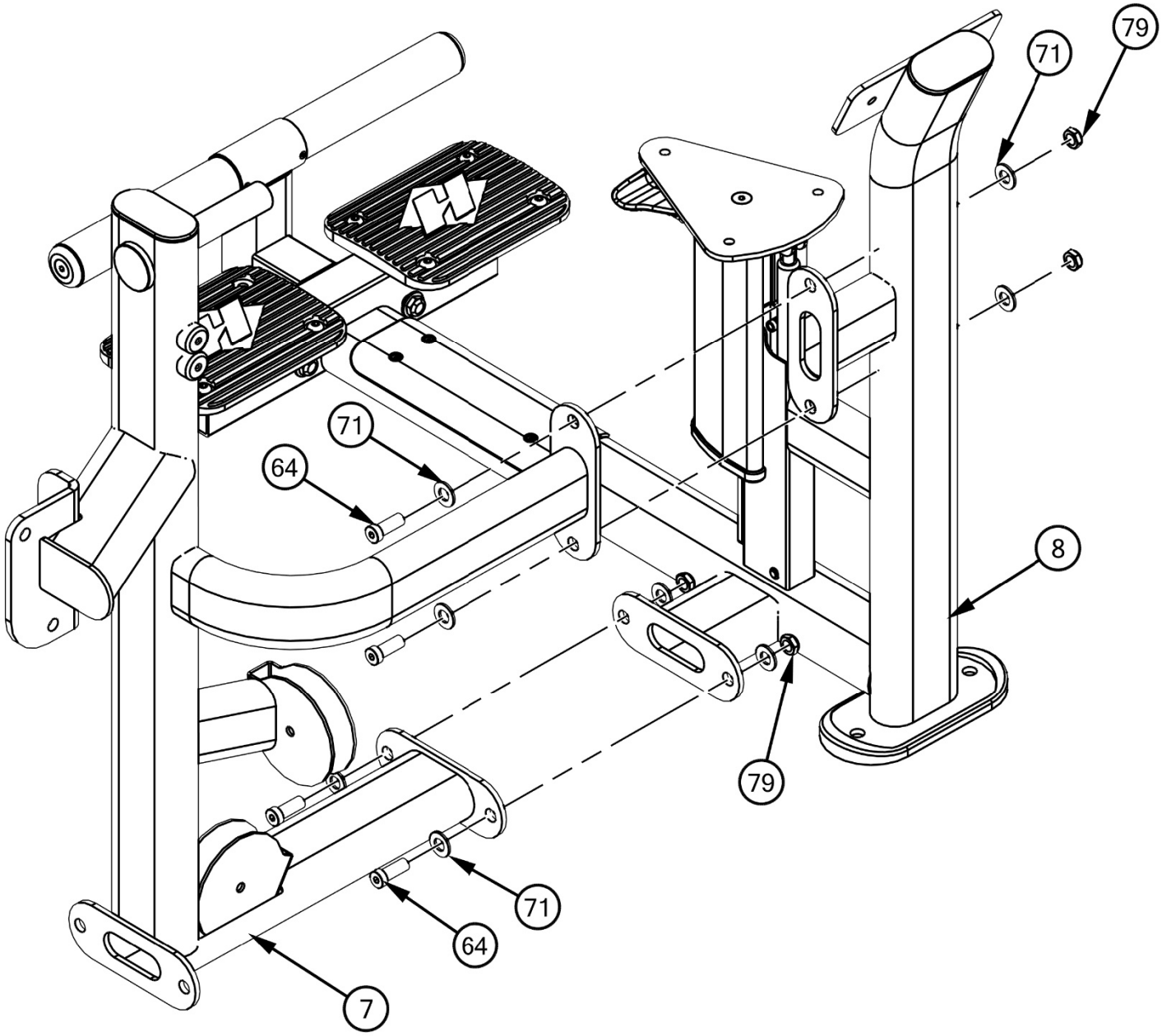

FRAME ASSEMBLY

NOTE:
* ONLY THREAD FHB (62) 3/4 OF THE WAY IN.
- HAND TIGHTEN HARDWARE
- SOME PARTS MAY HAVE BEEN REMOVED FOR CLARITY.

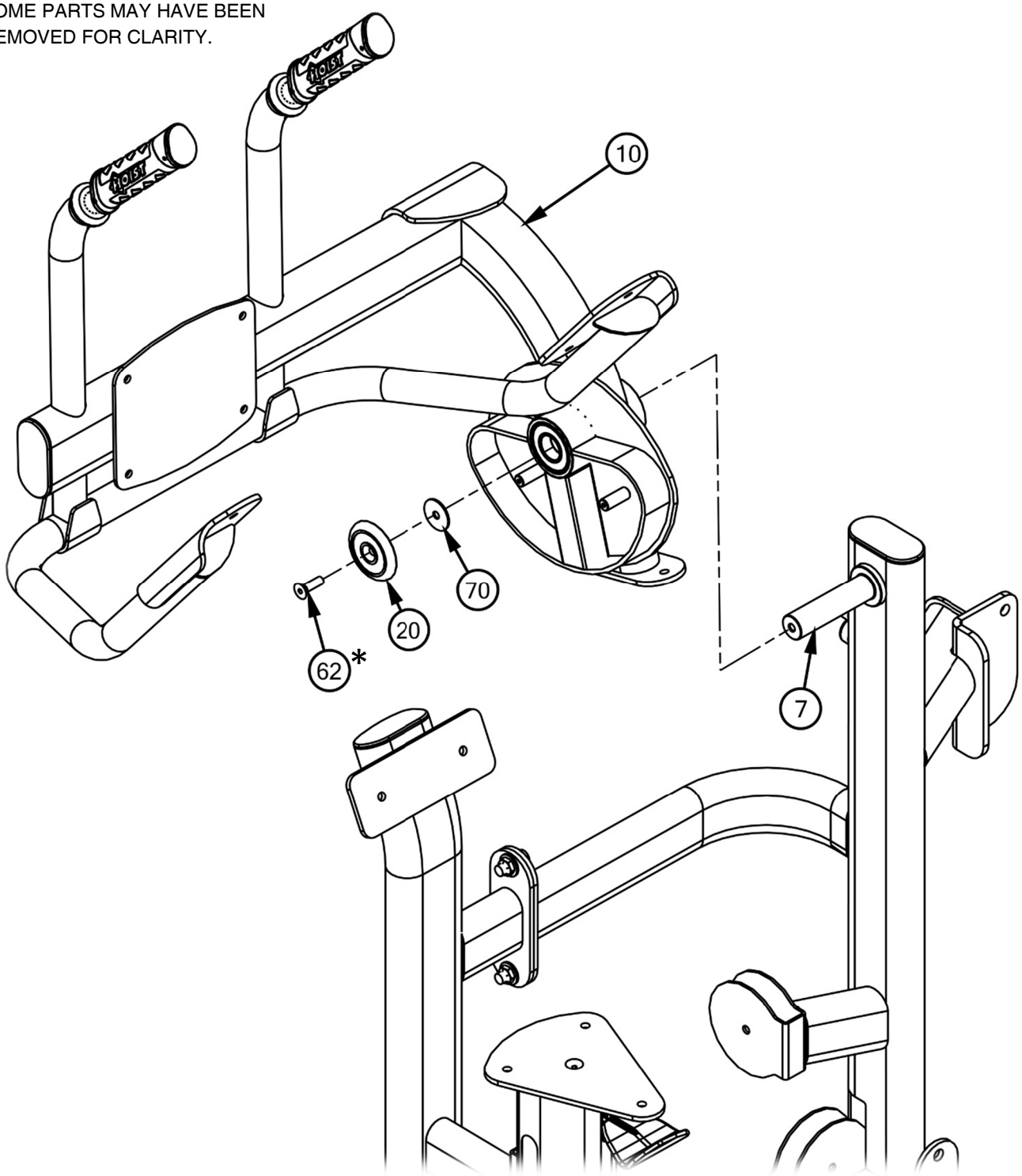

FRAME ASSEMBLY

NOTE:
- HAND TIGHTEN HARDWARE.
- SOME PARTS MAY HAVE BEEN REMOVED FOR CLARITY.

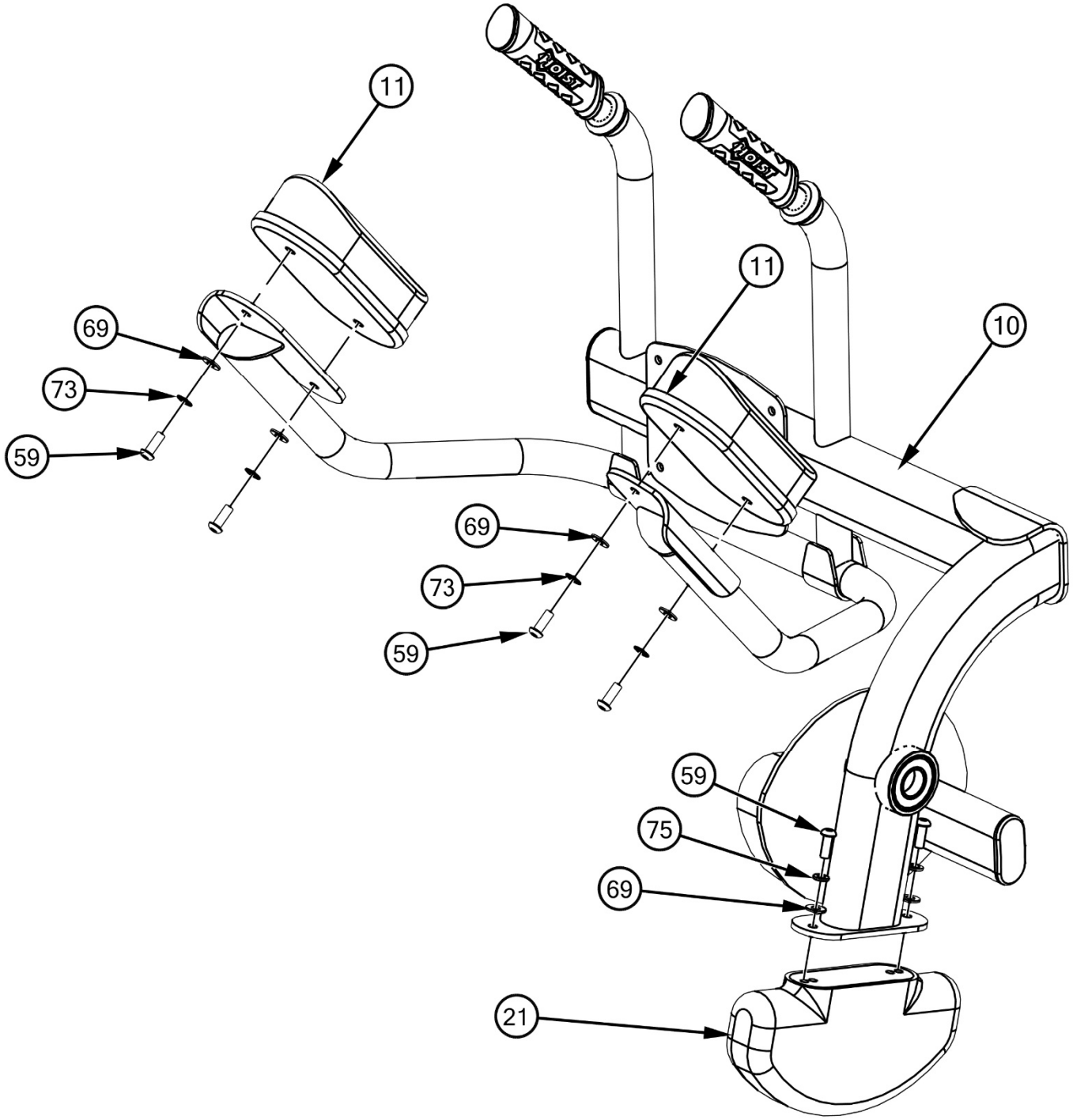

FRAME ASSEMBLY

NOTE:
- HAND TIGHTEN HARDWARE.
- SOME PARTS MAY HAVE BEEN REMOVED FOR CLARITY.

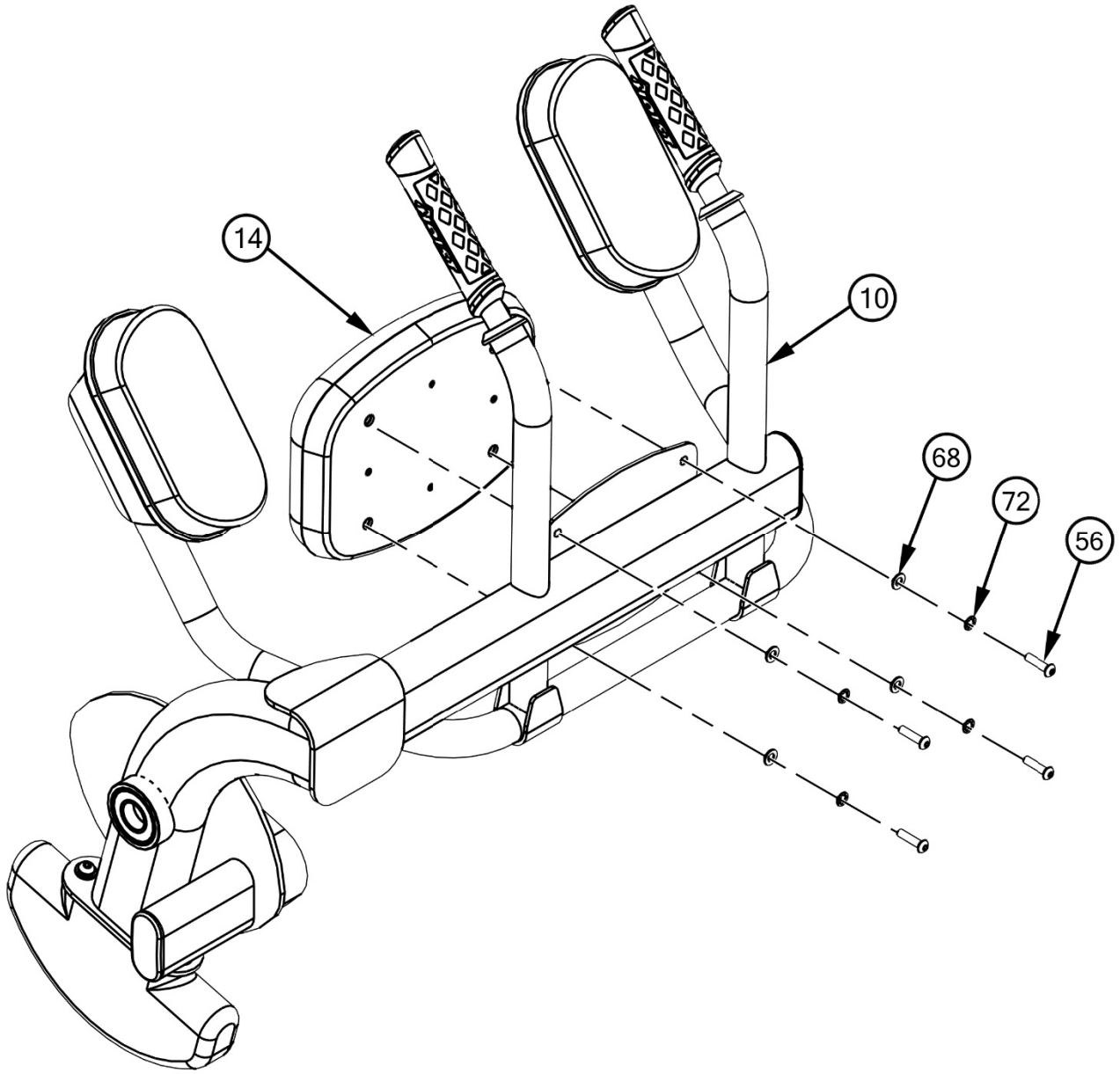

FRAME ASSEMBLY

NOTE:
- HAND TIGHTEN HARDWARE.
- SOME PARTS MAY HAVE BEEN REMOVED FOR CLARITY.

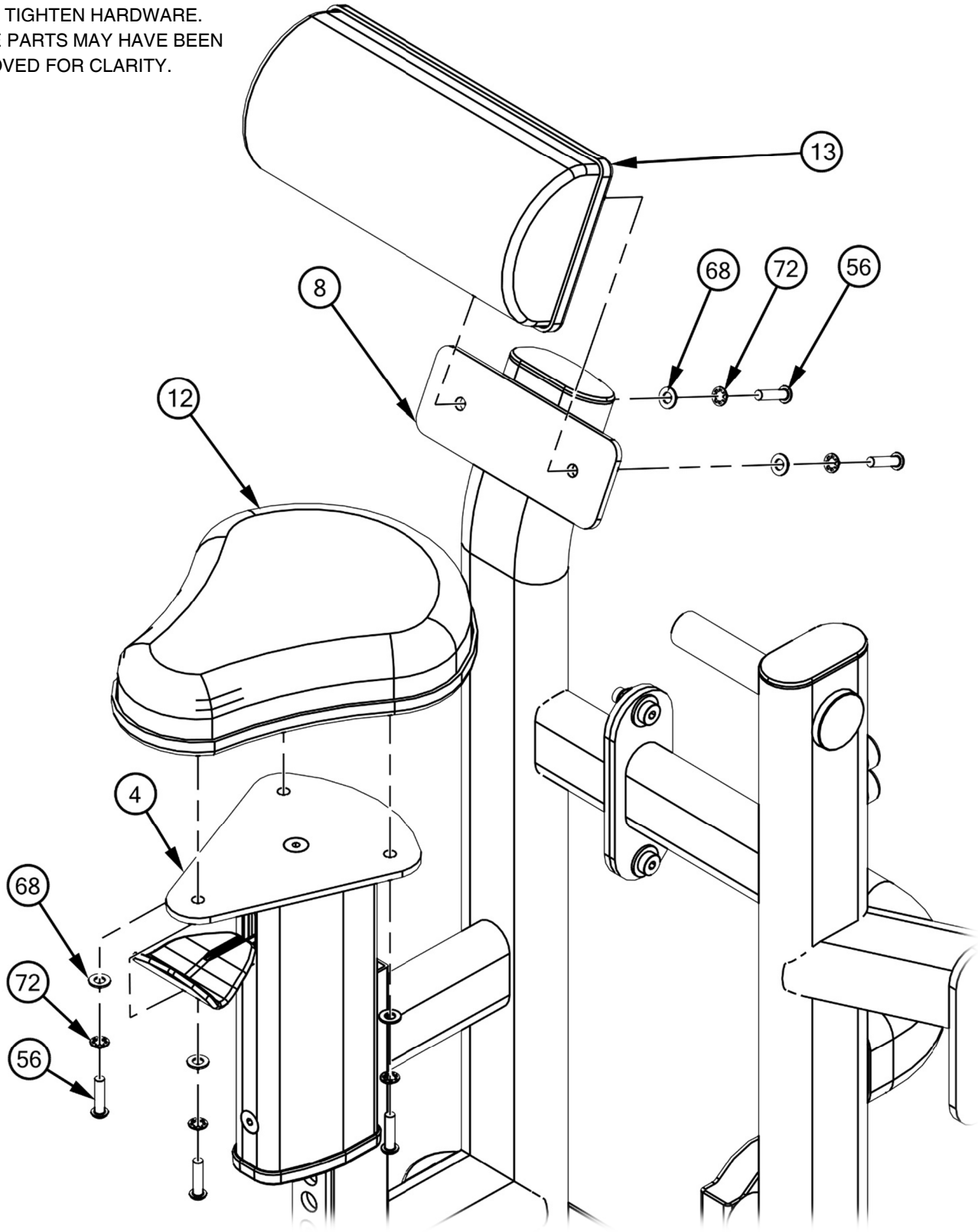

FRAME ASSEMBLY

NOTE:
- WRENCH TIGHTEN ALL PREVIOUSLY HAND TIGHTENED HARDWARE.
- SOME PARTS MAY HAVE BEEN REMOVED FOR CLARITY.

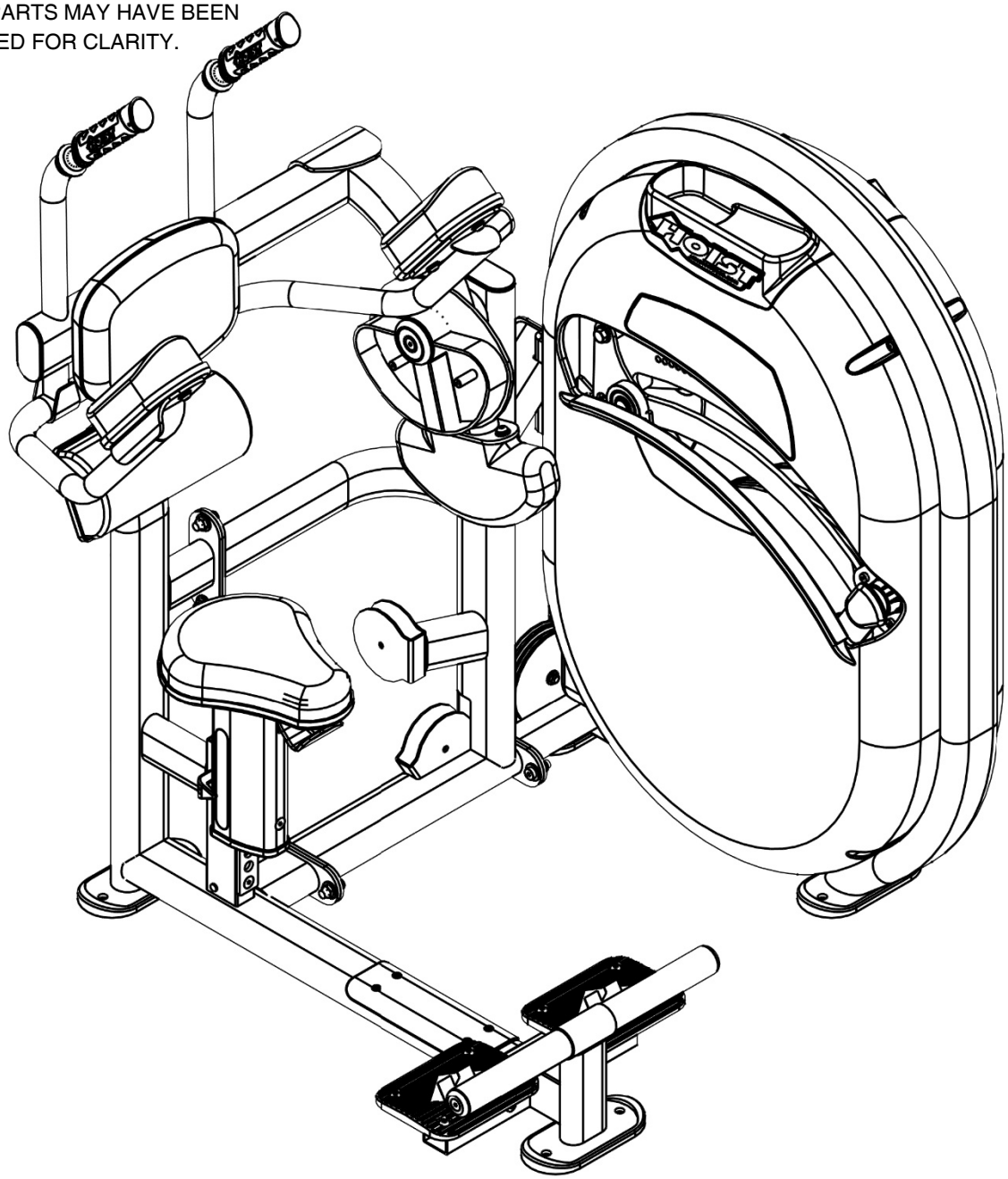

IMPORTANT

NOW THAT THE CL-3601 IS COMPLETELY ASSEMBLED, TAKE TIME TO ASSURE THAT YOUR UNIT IS ASSEMBLED SQUARE AND PERPENDICULAR. IF IT IS NOT PERPENDICULAR IN BOTH DIRECTIONS, IT WILL BE NECESSARY TO LOOSEN SOME FRAME HARDWARE TO RE-ALIGN THE FRAME AND RETIGHTEN BOLTS.

CABLE PROFILE VIEW

NOTE:
REFER TO SSS-CAGE-40 MANUAL FOR DETAILED INSTRUCTIONS ON CABLE ROUTING WITHIN THE CAGE ITSELF

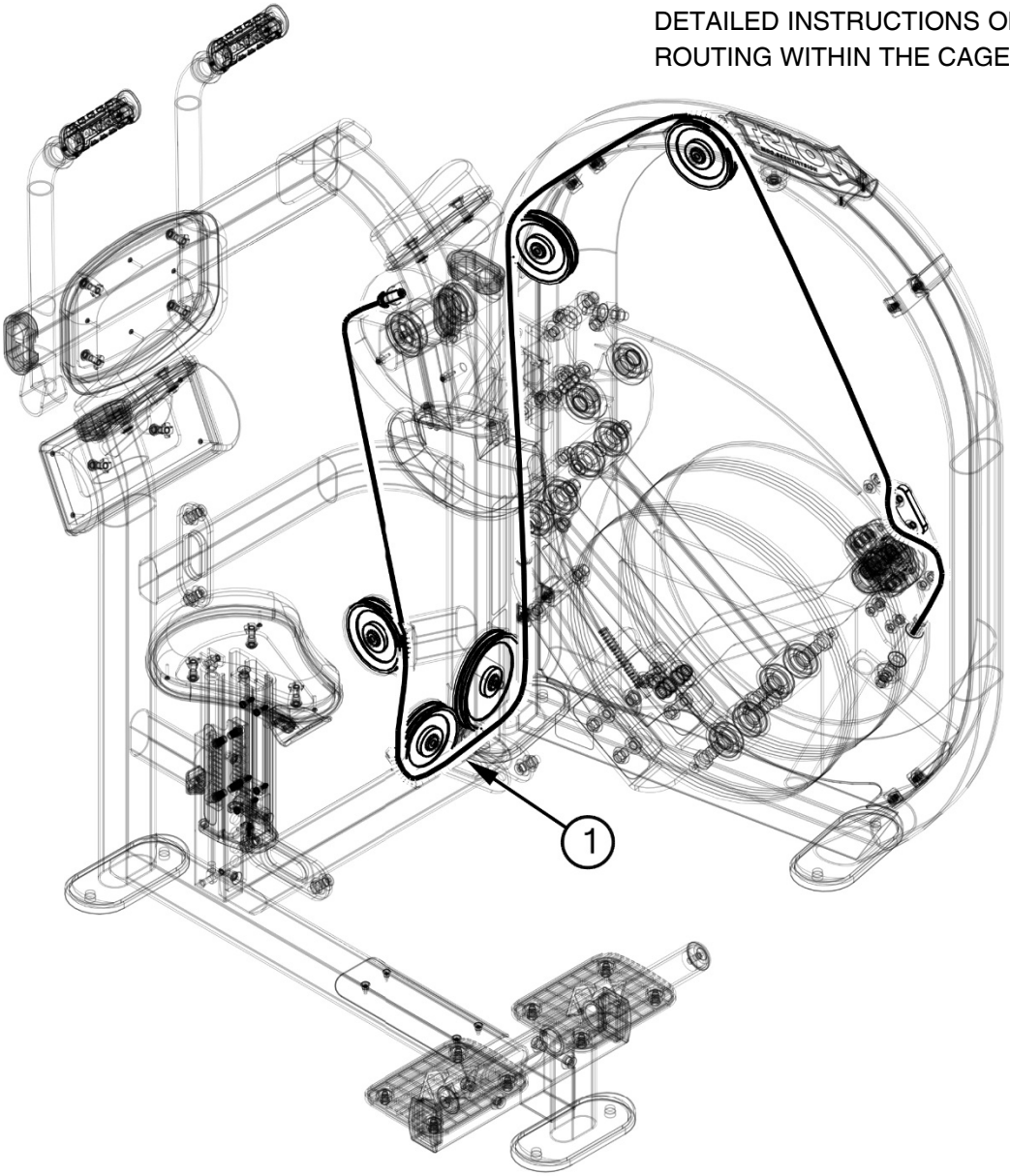

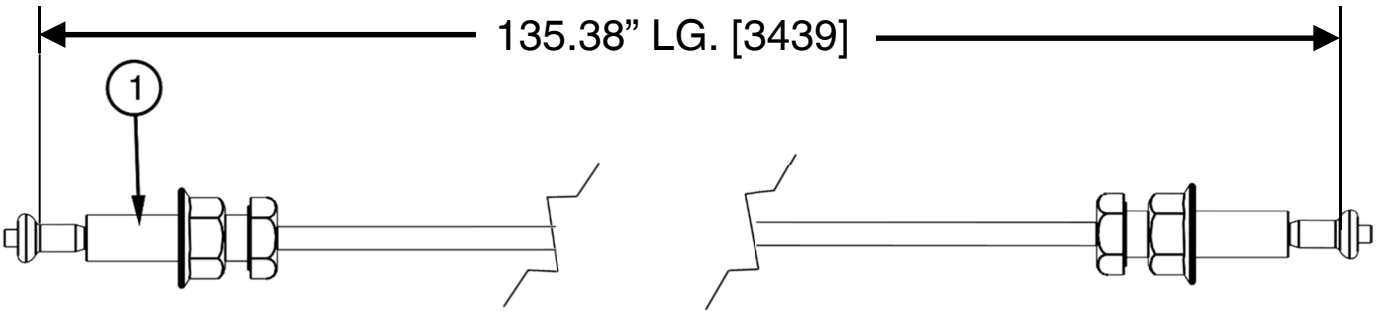

FRAME ASSEMBLY

NOTE:
- WRENCH TIGHTEN HARDWARE.
- INSTALL CABLE AND PULLEYS AT THE SAME TIME.
- SOME PARTS MAY HAVE BEEN REMOVED FOR CLARITY.

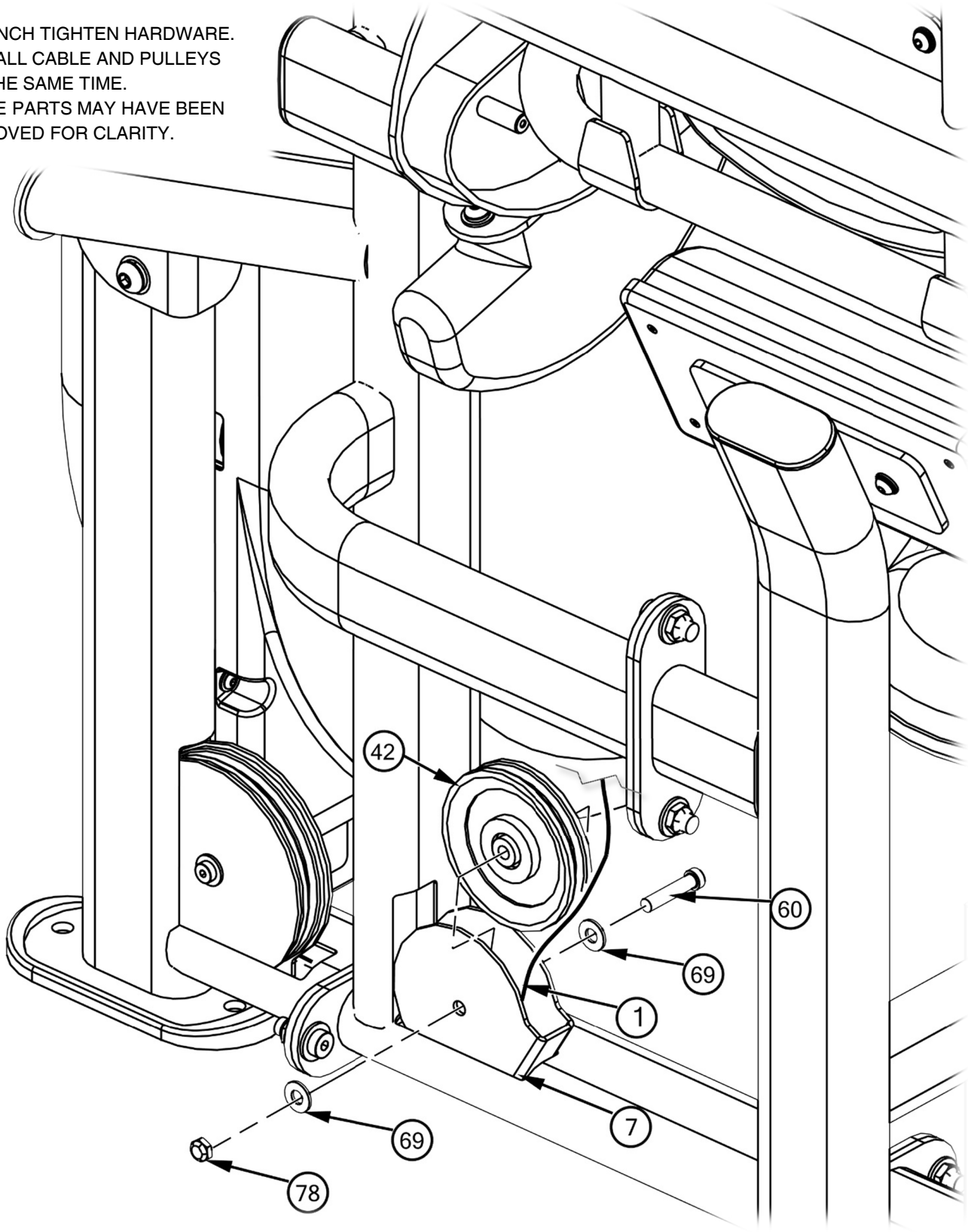

FRAME ASSEMBLY

NOTE:
- WRENCH TIGHTEN HARDWARE.
- INSTALL CABLE AND PULLEYS AT THE SAME TIME.
- SOME PARTS MAY HAVE BEEN REMOVED FOR CLARITY.

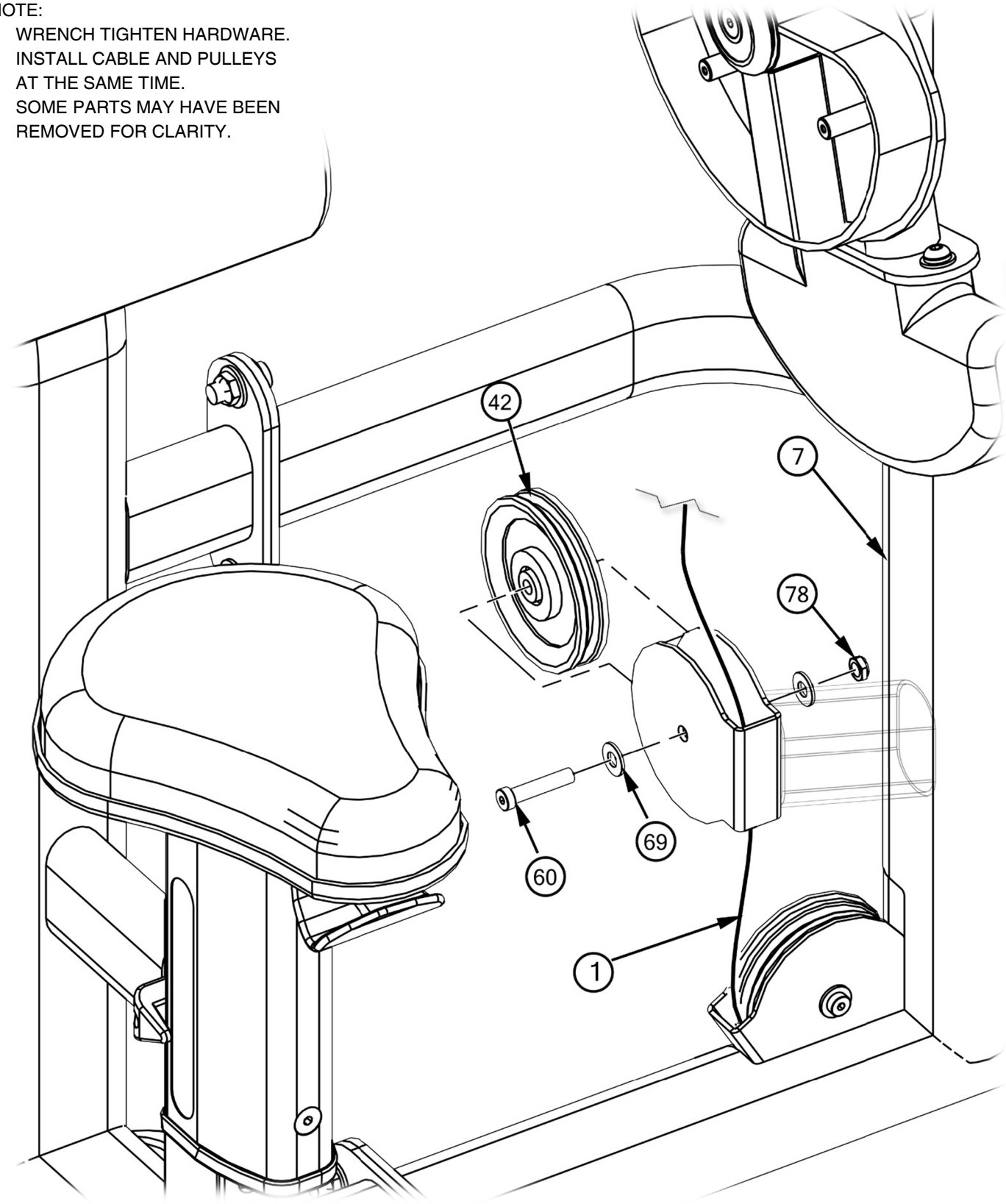

FRAME ASSEMBLY

FINE TUNING

LOOSEN JAM NUT AND THREAD BOLT IN/OUT TO GIVE THE CABLE PROPER TENSION. RE-TIGHTEN JAM NUT.

WARNING – CABLE BOLT MUST BE THREADED A MINIMUM OF 3/8" WITH JAM NUT TIGHTENED SECURELY TO ENSURE PROPER CONNECTION.

NOTE:

- WRENCH TIGHTEN HARDWARE.
- INSTALL CABLE AND PULLEYS AT THE SAME TIME.
- SOME PARTS MAY HAVE BEEN REMOVED FOR CLARITY.

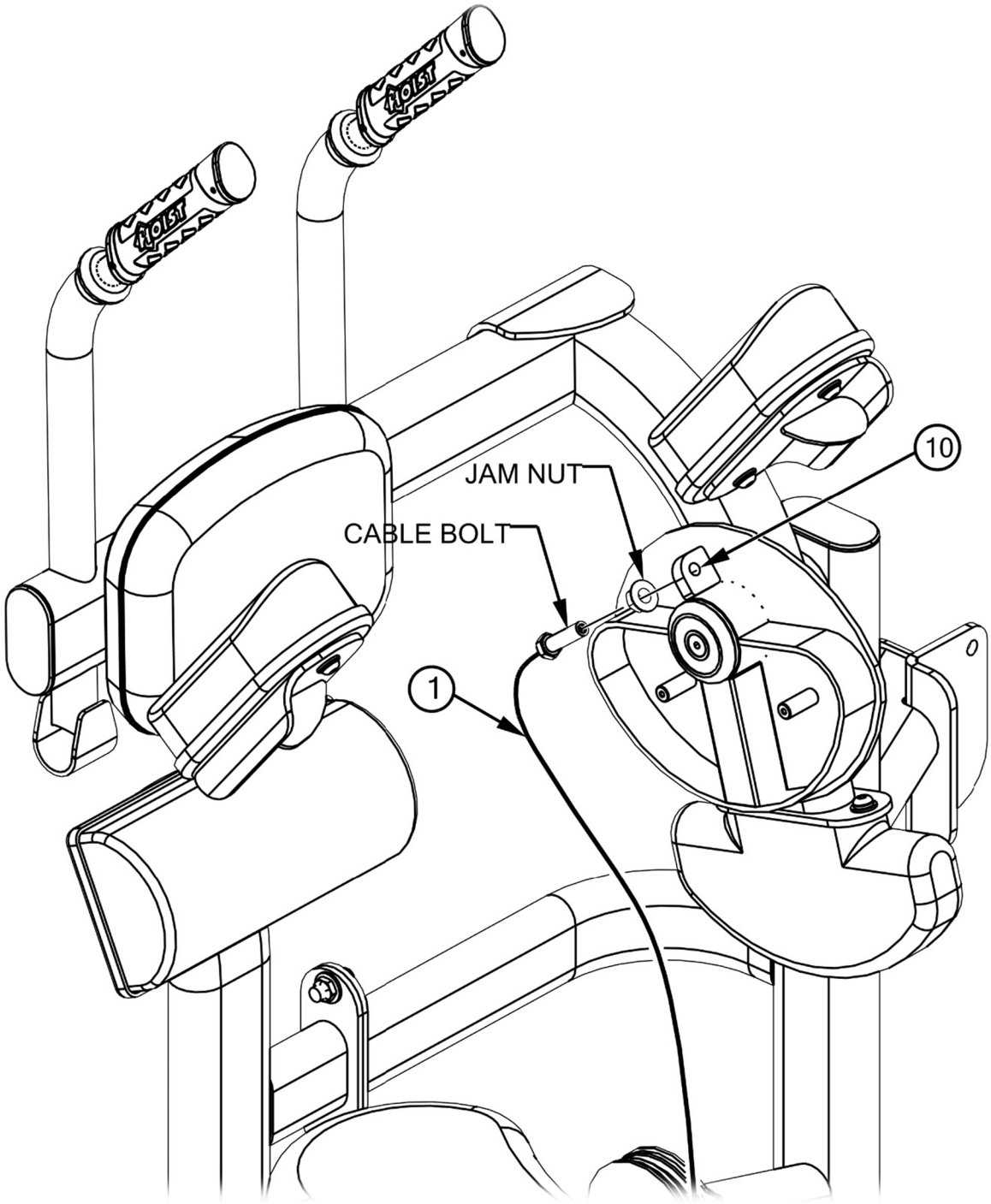

FRAME ASSEMBLY

NOTE:
* REMOVE (62), (20), & (70) JUST ENOUGH TO INSTALL SHIELDS (39) & (38).
- WRENCH TIGHTEN HARDWARE.
- SOME PARTS MAY HAVE BEEN REMOVED FOR CLARITY.

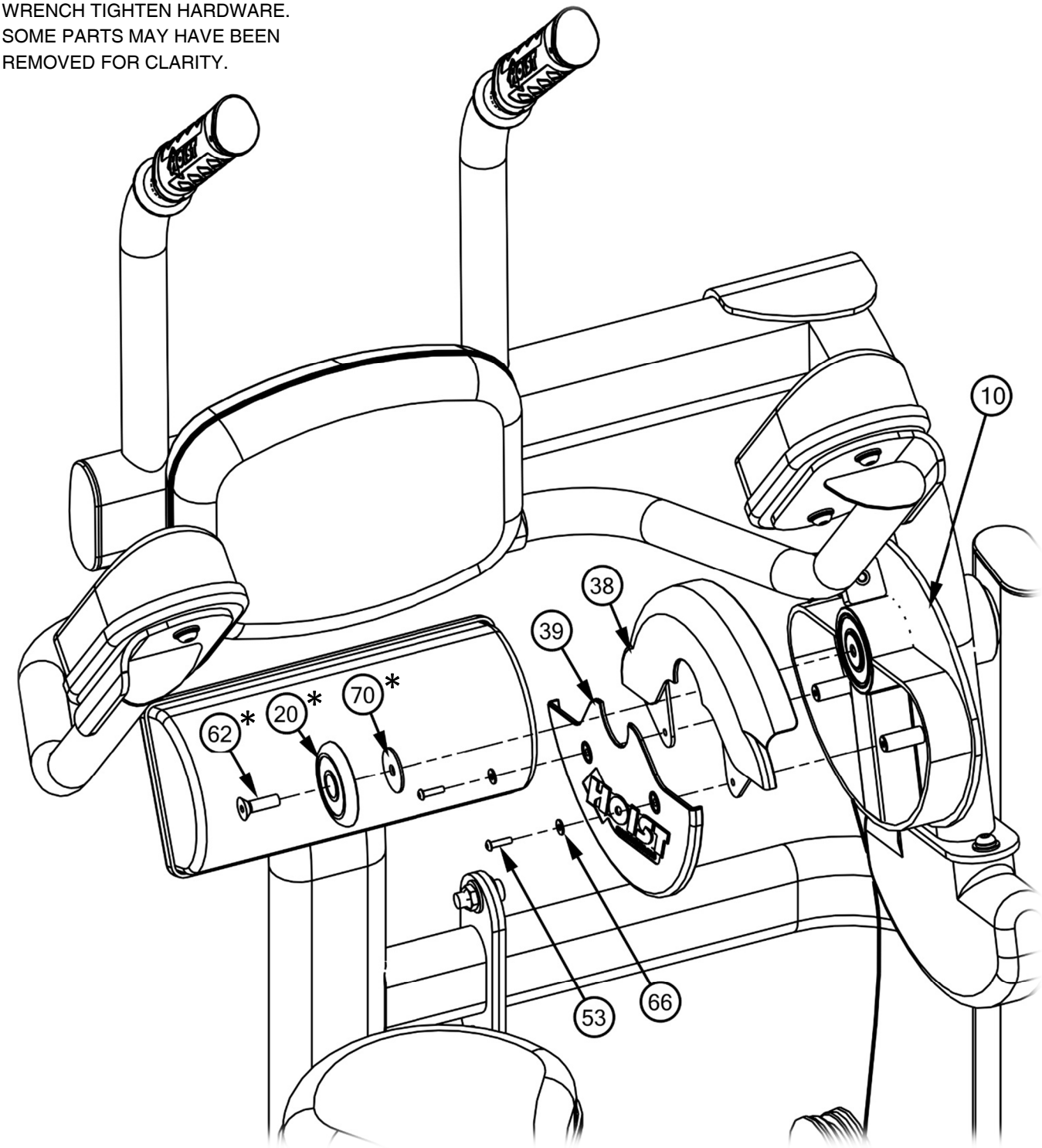

PRE-ASSEMBLY

NOTE:
- INSTALL SEAT MOUNT (4) ONTO (3) BEORE ATTACHING STARRED COMPONENTS.
- SOME PARTS MAY HAVE BEEN REMOVED FOR CLARITY.

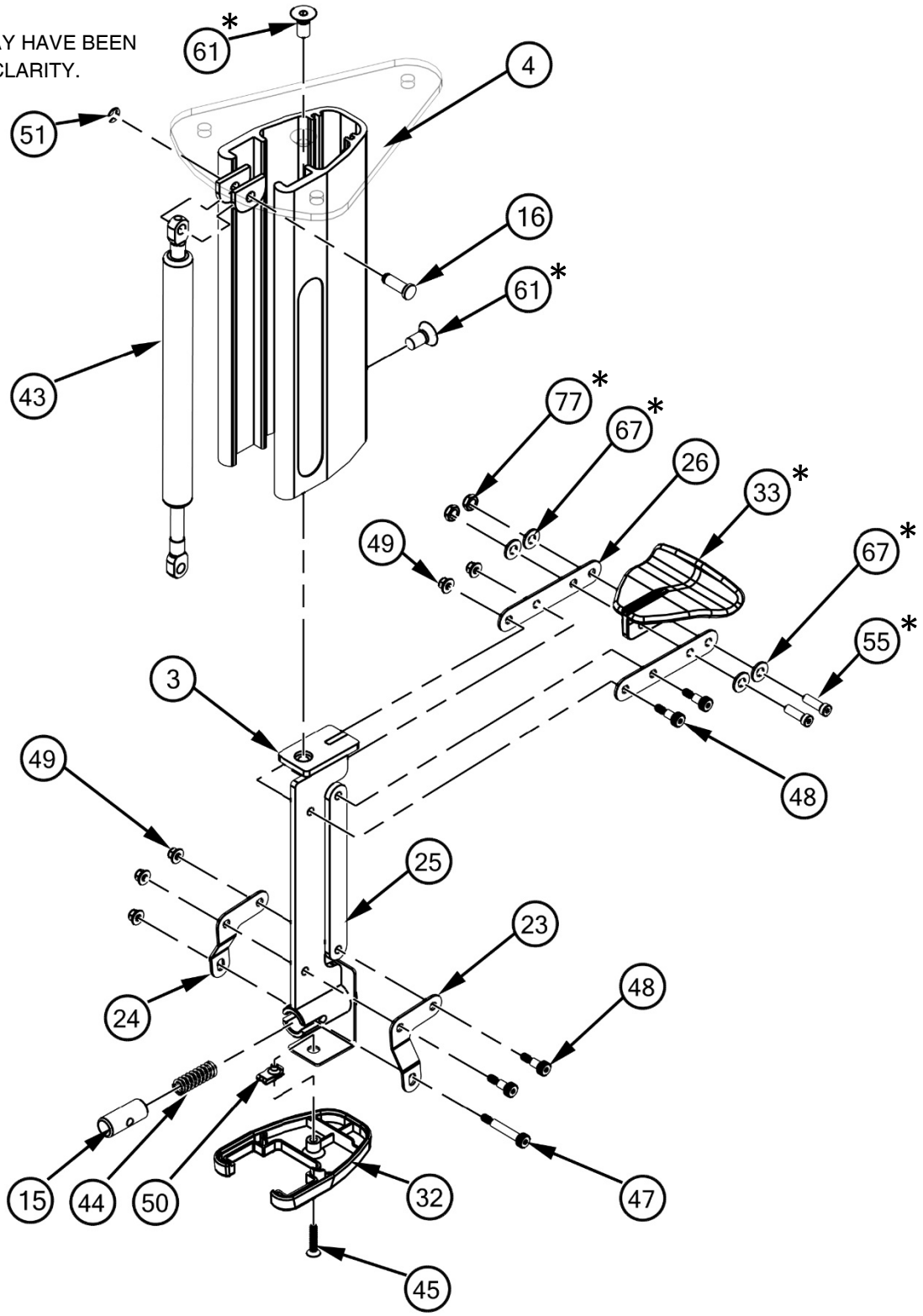

PRE-ASSEMBLY CONTINUED

NOTE:
- SOME PARTS MAY HAVE BEEN REMOVED FOR CLARITY.

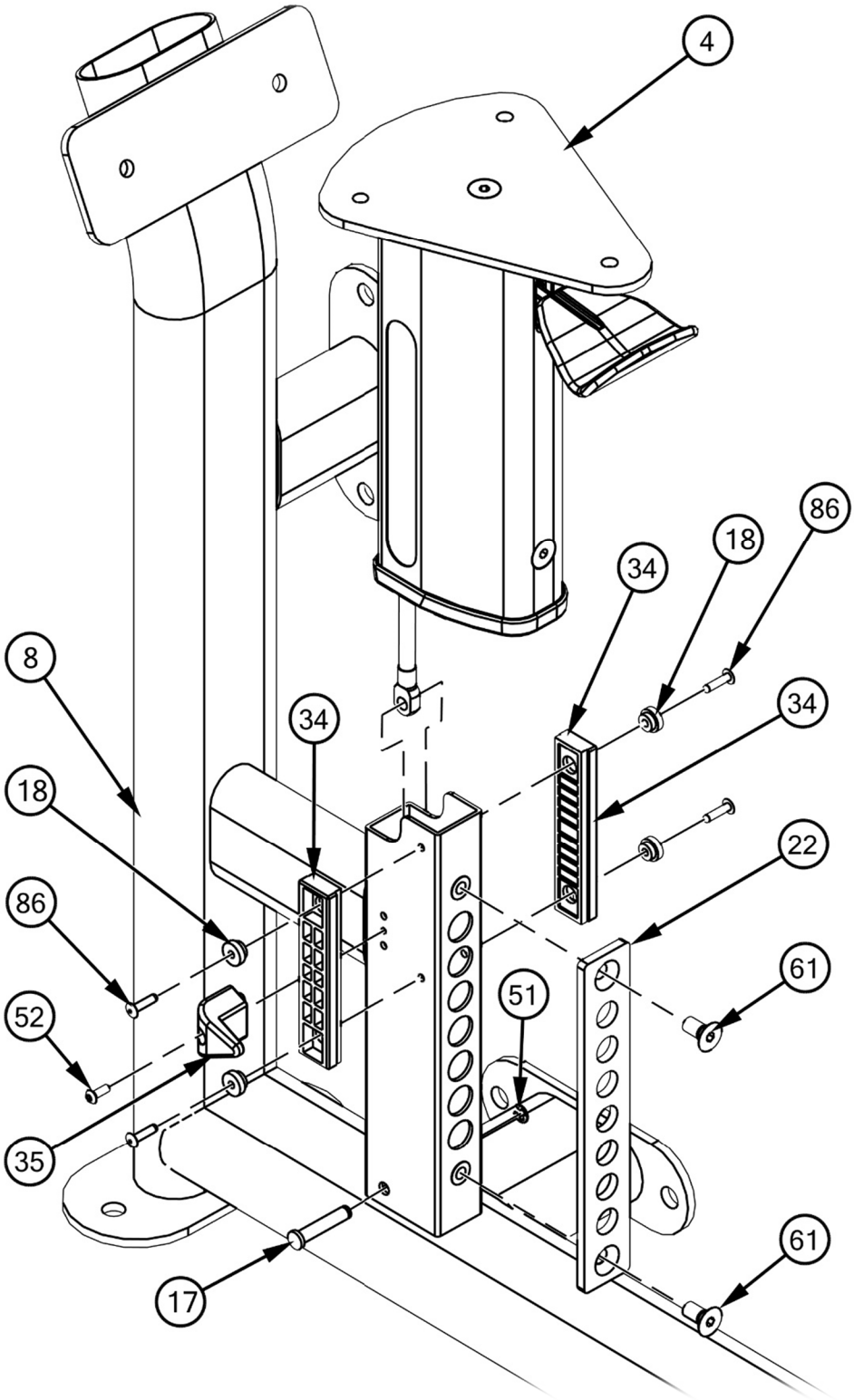

PRE-ASSEMBLY CONTINUED

NOTE:
- SOME PARTS MAY HAVE BEEN REMOVED FOR CLARITY.

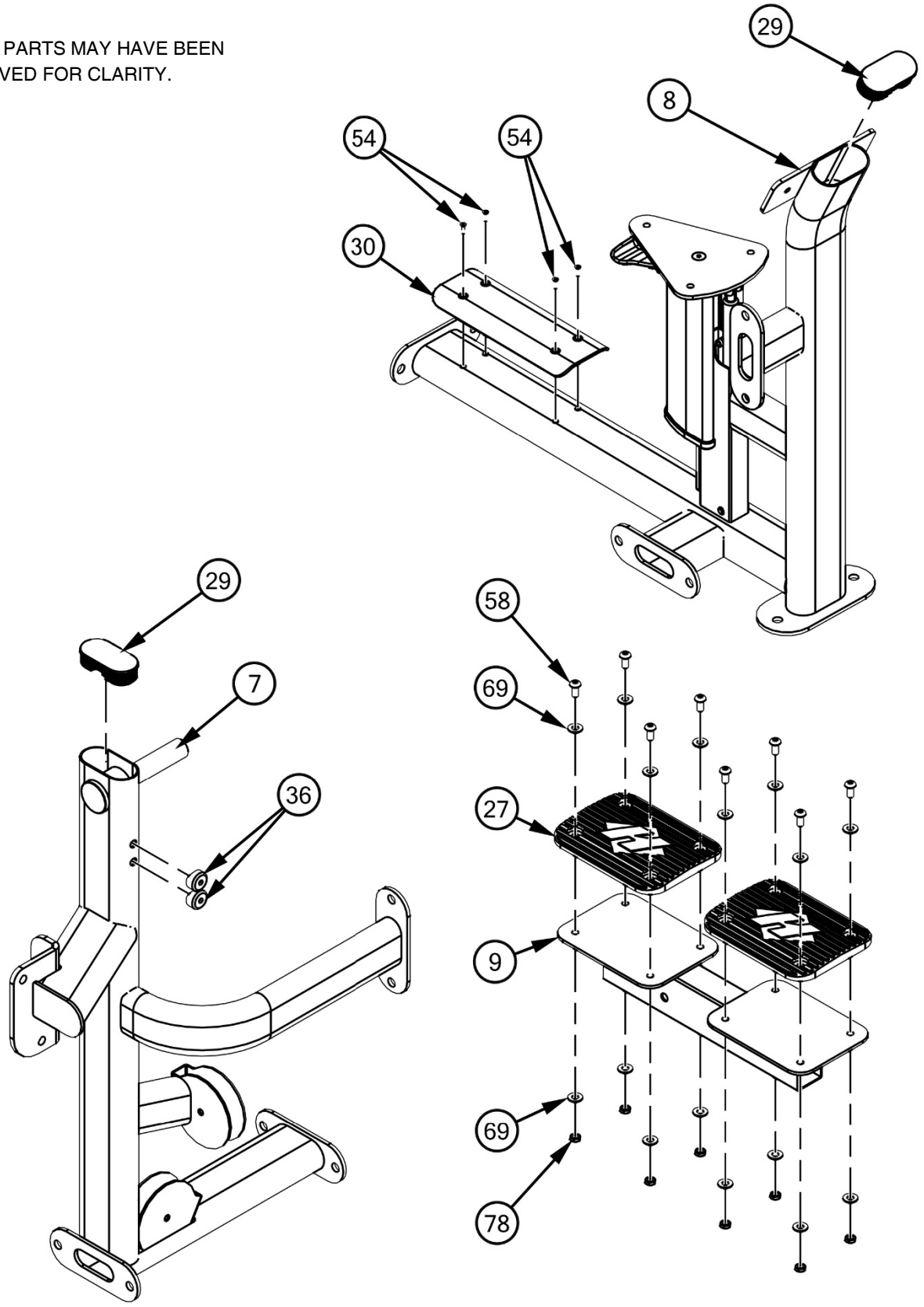

PRE-ASSEMBLY CONTINUED

NOTE:
- SOME PARTS MAY HAVE BEEN REMOVED FOR CLARITY.

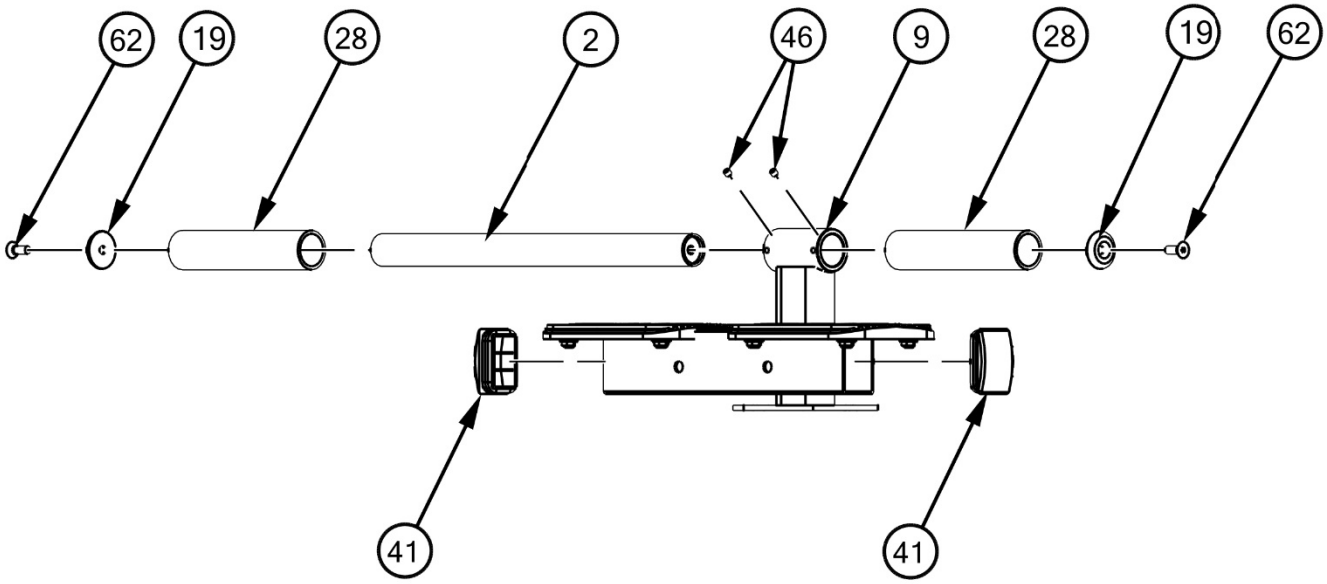

DECAL PLACEMENT

NOTE:
- SOME PARTS MAY HAVE BEEN REMOVED FOR CLARITY.

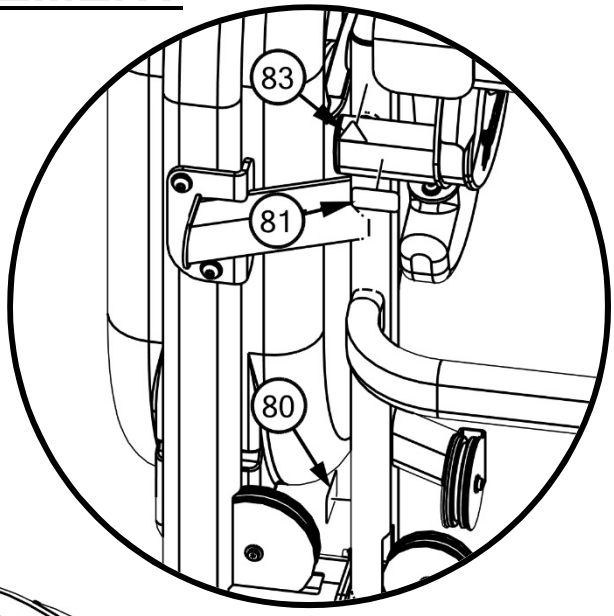

VIEW FROM BACK.

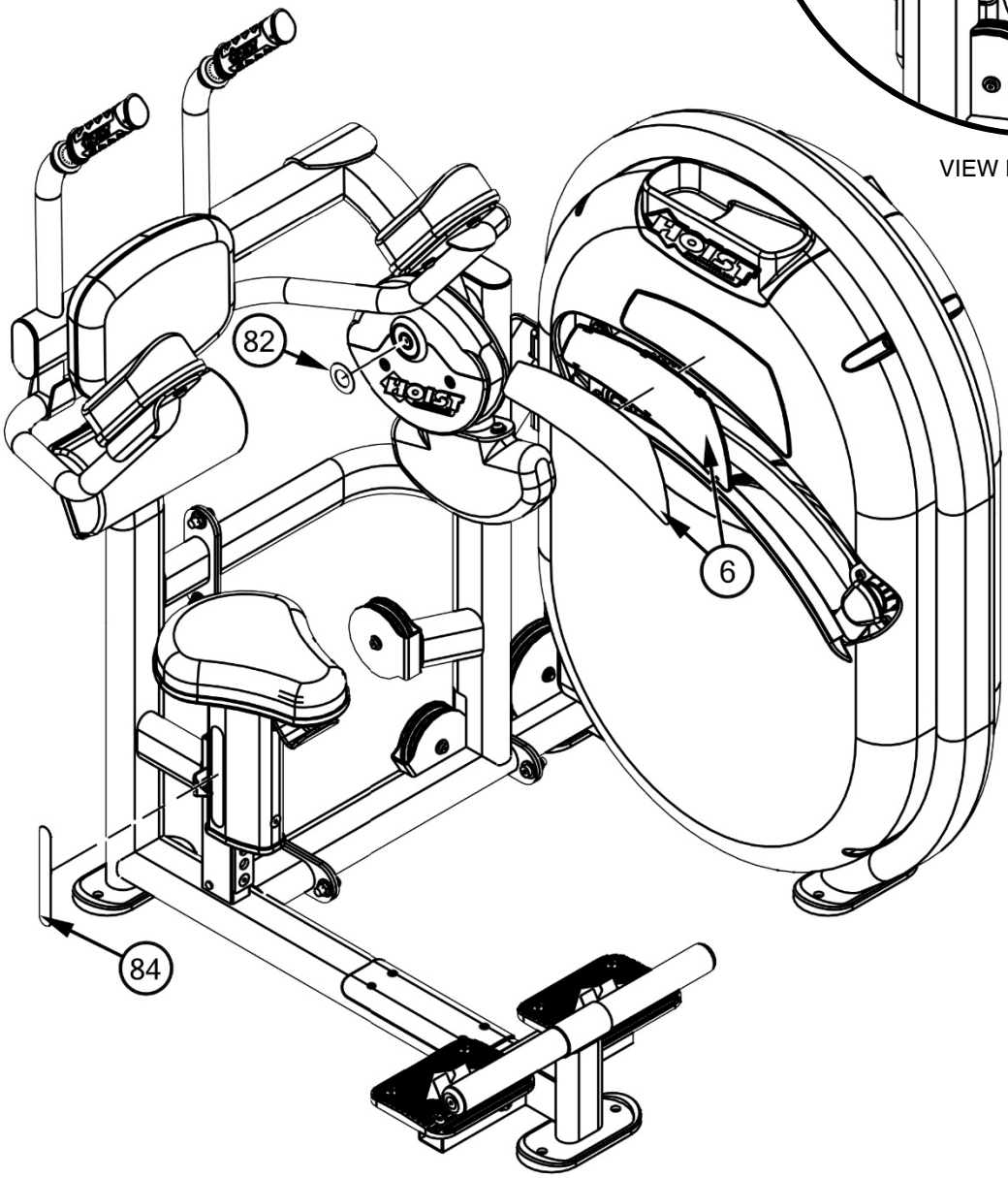

DECAL REFERENCE

021-0013327
Assembly P/N: 026-01X7384

SERIAL # DECAL

021-0003093

021-0003418

021-0003512

021-0003911

PART LIST

NOTE: SOME OF THESE PARTS MAY COME PRE-INSTALLED

ITEM NO.	PART NUMBER	DESCRIPTION	QTY.
1	010-01C0810	Ø.188" X Ø.25" CABLE ASSY. (CL-3601)	1
2	026-01X3887	20.25" WEIGHT HORN	1
3	026-01X6828	PULL PIN RETRACTOR FRAME	1
4	026-01X7292	SEAT PAD MOUNT	1
5	026-01X7351	HOIST ERGO GRIP-01	2
6	026-01X7384	CL-3601 EXERCISE PLACARD, MOUNTED	1
7	026-01X7385	CROSSMEMBER, ARM MOUNT	1
8	026-01X7386	MAIN FRAME	1
9	026-01X7387	FRONT FOOT	1
10	026-01X7388	ARM ASSY.	1
11	022-01PD0082-A	SHOULDER PAD ASSEMBLY	2
12	022-01PD2099-A	SEAT PAD ASSEMBLY	1
13	022-01PD2326-A	LOW BACK PAD ASSEMBLY	1
14	022-01PD2353-A	MOLDED PAD ASSY.	1
15	026-01M3493	SEAT ADJUSTER SELECTOR PIN	1
16	026-01M3495	RETAINING PIN, 8MM OD, 1.03" LG	1
17	026-01M3496	RETAINING PIN, 8MM OD, 1.72" LG	1
18	026-01M3721	FLANGED SPACER, ∅".1910 X .139 LG.	4
19	026-01M3605	RETAINING CAP	2
20	026-01M3610	FINISH CAP ∅2.8425" ALUM. (W/RECESS)	1
21	026-01P4508	COUNTERWEIGHT W/ COATING	1
22	026-01P4836	ADJUSTER STRIP	1
23	026-01P4840	SEAT ADJUSTER LOWER LEFT PIVOT BRACKET	1
24	026-01P4841	SEAT ADJUSTER LOWER RIGHT PIVOT BRACKET	1
25	026-01P4842	SEAT ADJUST CENTER LINK	1
26	026-01P4843	SEAT ADJUSTER UPPER PIVOT LINK	2
27	026-01PL2260	FOOTPLATE	2
28	026-01PL2532	LONG WEIGHT HORN COVER	2
29	026-01PL2566	50 X 100 OVAL DOMED END CAP	3
30	026-01PL2834	SCUFF GUARD, 50 X 100mm FLAT SIDE	1
31	026-01PL2838	RUBBER FOOT PAD	2
32	026-01PL2848	END CAP, EXTRUDED HOUSING	1
33	026-01PL2850	ADJUSTER LEVER	1
34	026-01PL2938-M	SLIDE GUIDE	2
35	026-01PL2939	POINTER	1

PART LIST CONTINUED

NOTE: SOME OF THESE PARTS MAY COME PRE-INSTALLED

ITEM NO.	PART NUMBER	DESCRIPTION	QTY.
36	026-01PL2561	PLUG BUMPER, COPED	2
37	026-01PL2565	3.15" X 1.57" CAP	1
38	026-01PL2941	CAM SIDE COVER-1	1
39	026-01PL2942	CAM SIDE COVER-2	1
40	014-0012013	BEARING: BALL BEARING Ø2.44" O.D. X Ø1.18" I.D.	2
41	016-0201034	END CAP-R 2.00" X 3.00" (BLACK)	2
42	018-0001003	CABLE PULLEY: Ø4.50"	2
43	020-0006009	GAS SPRING, 40 LBS, 8MM ENDS	1
44	020-0011025	COMPRESSION SPRING, .48" OD X1.38" LG, 9 COIL, .0720" WIRE	1
45	011-0701150	10-32 UNC X 1" LG, FHCS (Ni)	1
46	011-0711002	SET SCREW: 5/16"- 18 X .25" LG. (Ni)	2
47	011-0712012	6MM O.D. X 30MM LG. SHOULDER BOLT	1
48	011-0712013	6MM O.D. X 10MM LG. SHOULDER BOLT	4
49	012-0503002	M5 X 0.8 FLANGED NYLOCK NUT	5
50	012-0609007	CLIP ON NUT, 10-32	1
51	014-0015046	RETAINING RING, E CLIP, FOR 7-9MM SHAFT	2
52	011-0701112	#10-32UNC x .5 BHCS (Ni)	1
53	011-0701113	#10-32UNC x .75 BHCS (Ni)	2
54	011-0413001	M5 - .8 X 16mm FHS (SS}	4
55	011-0116204	1/4"-20UNC X .75" LOW HEAD SHCS (Ni)	2
56	011-0701004	5/16"-18UNC X 1.25" BHCS (Ni)	9
58	011-0701019	3/8"-16UNC X .75" BHCS (Ni)	8
59	011-0701020	3/8"-16UNC X 1.00" BHCS (Ni)	6
60	011-0116145	3/8"-16UNC X 1.75" LOW HEAD SHCS (Ni)	2
61	011-0002049	3/8"-16UNC X .75" FHCS (Ni) W/NYLON PATCH	4
62	011-0702021	3/8"-16UNC X 1.25" FHCS (Ni) W/NYLON PATCH	3
63	011-0701049	1/2"-13UNC X 1.50" BHCS (Ni)	2
64	011-0116107	1/2"-13UNC X 1.00" LOW HEAD SHCS (Ni)	6
65	011-0116114	1/2"-13UNC X 2.75" LOW HEAD SHCS (Ni)	2
66	013-1002011	#10 FLAT WASHER (Ni)	2
67	013-1002008	1/4" X 16mm SAE FLAT WASHER (Ni)	4
68	013-1002010	5/16" SAE FLAT WASHER (Ni)	9
69	013-1002007	3/8" X 22mm FLAT WASHER (Ni)	26
70	013-1003001	3/8" FENDER WASHER (Ni)	1

PART LIST CONTINUED

NOTE: SOME OF THESE PARTS MAY COME PRE-INSTALLED

ITEM NO.	PART NUMBER	DESCRIPTION	QTY.
71	013-1002006	1/2" X 27mm SAE FLAT WASHER (Ni)	18
72	013-1010003	5/16" INTERNAL LOCK WASHER (Ni)	9
73	013-1010002	3/8" INTERNAL LOCK WASHER (Ni)	4
74	013-1006006	#10 SPLIT LOCK WASHER (Ni)	2
75	013-1006003	3/8" SPLIT LOCK WASHER (Ni)	2
76	013-1006004	1/2" SPLIT LOCK WASHER (Ni)	2
77	012-0504004	1/4"-20 UNC THIN NYLOCK NUT (Ni)	2
78	012-0504005	3/8"-16 UNC THIN NYLOCK NUT (Ni)	10
79	012-0504002	1/2"-13 UNC THIN NYLOCK NUT (Ni)	8
80	SERIAL # DECAL	DECAL HOIST SERIAL # 1.63" X 2.63"	1
81	021-0003093	DECAL MOVING PARTS 1.20" X 2.38" (HOR)	1
82	021-0003418	DECAL PIVOT POINT (ROUND)	1
83	021-0003512	DECAL PINCH POINT 1.18" X 1.35" (TRIANGLE)	1
84	021-0003911	DECAL ADJUST 1-7 VERTICAL GREY BKGRND	1
85	SSS-CAGE60	CL-S3 RESISTANCE SYSTEM (300 LB.)	1
86	RIVET-316	3/16" BLIND RIVET, 18-8 SS	4

ABBREVIATIONS

BZ = Black Zinc
WZ = White Zinc
SS = Stainless Steel

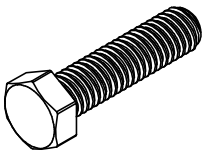

HHB = Hex Head Bolt

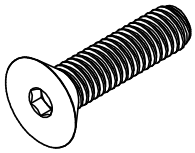

FHCS = Flat Head Cap Screw

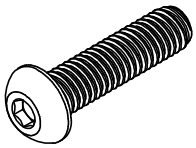

BHCS = Button Head Cap Screw

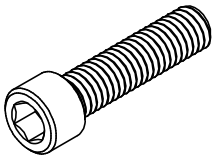

SHCS = Socket Head Cap Screw

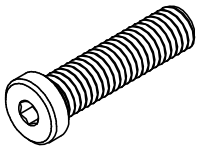

Low Head SHCS = Low Head Socket Head Cap Screw

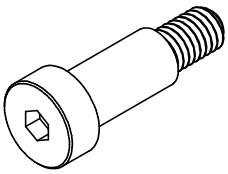

SHSS = Socket Head Shoulder Screw

BOLT SIZING CHART

1/4" HHB
RECOMMENDED TORQUE RANGE:
6-8 ft-lbs

5/16" HHB
RECOMMENDED TORQUE RANGE:
14-17 ft-lbs

3/8" HHB
RECOMMENDED TORQUE RANGE:
24-30 ft-lbs

1/2" HHB
RECOMMENDED TORQUE RANGE:
60-75 ft-lbs

1/4" BHCS
RECOMMENDED TORQUE RANGE:
5-7 ft-lbs

5/16" BHCS
RECOMMENDED TORQUE RANGE:
11-15 ft-lbs

3/8" BHCS
RECOMMENDED TORQUE RANGE:
19-26 ft-lbs

1/2" BHCS
RECOMMENDED TORQUE RANGE:
47-65 ft-lbs

1/4" LOW HEAD SHCS
RECOMMENDED TORQUE RANGE:
4-6 ft-lbs

5/16" LOW HEAD SHCS
RECOMMENDED TORQUE RANGE:
9-12 ft-lbs

3/8" LOW HEAD SHCS
RECOMMENDED TORQUE RANGE:
18-23 ft-lbs

1/2" LOW HEAD SHCS
RECOMMENDED TORQUE RANGE:
40-50 ft-lbs

1/4" SHCS
RECOMMENDED TORQUE RANGE:
11-14 ft-lbs

5/16" SHCS
RECOMMENDED TORQUE RANGE:
23-29 ft-lbs

3/8" SHCS
RECOMMENDED TORQUE RANGE:
39-49 ft-lbs

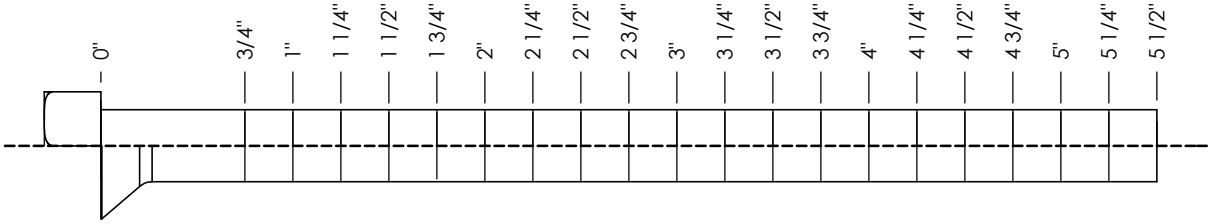

1/4" FHCS
RECOMMENDED TORQUE RANGE:
5-7 ft-lbs

3/8" FHCS
RECOMMENDED TORQUE RANGE:
19-26 ft-lbs

1/2" FHCS
RECOMMENDED TORQUE RANGE:
47-65 ft-lbs

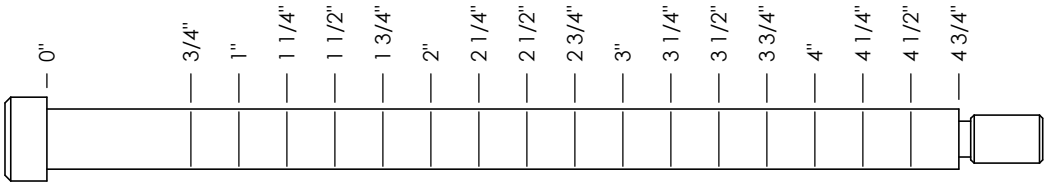

1/4" SHSS
RECOMMENDED TORQUE RANGE:
3-4 ft-lbs

5/16" SHSS
RECOMMENDED TORQUE RANGE:
8-10 ft-lbs

3/8" SHSS
RECOMMENDED TORQUE RANGE:
17-22 ft-lbs

WASHER SIZING CHART

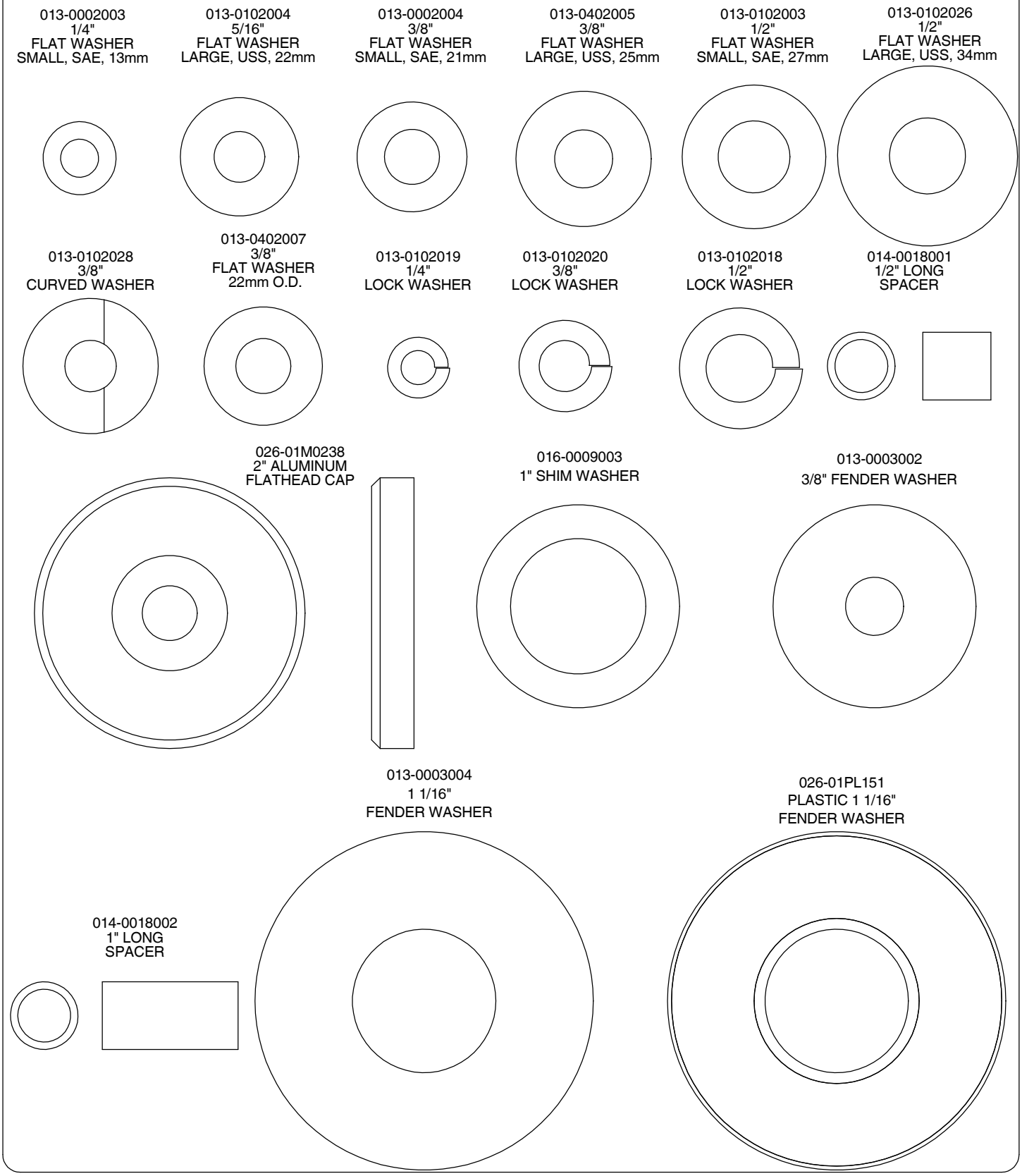

WASHER SIZING CHART
(CONTINUED)

026-01M0211
1/4" LONG
FLANGED SPACER

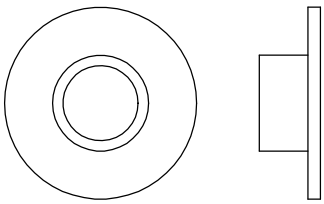

026-01M0198
1/2" LONG
FLANGED SPACER

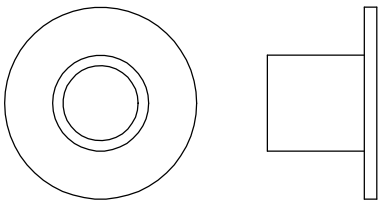

026-01M0760
1/2" LONG HEAVY
FLANGED SPACER

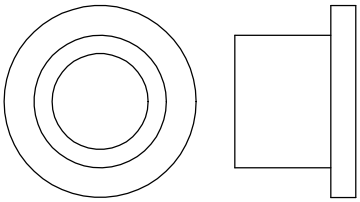

026-01M211T
1/4" LONG HEAVY
FLANGED SPACER

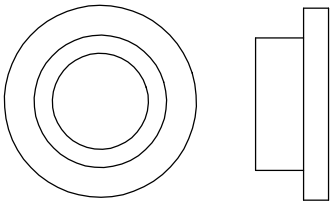

026-01M0532
11/16" LONG HEAVY
FLANGED SPACER

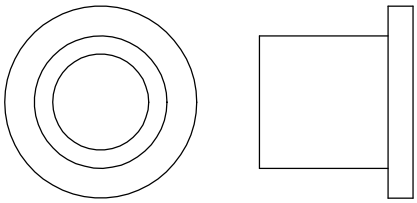

026-01M0551
1" LONG HEAVY
FLANGED SPACER

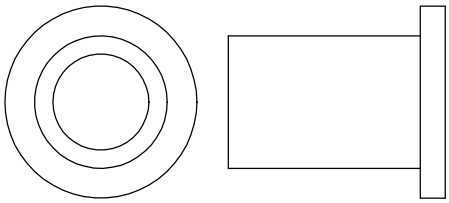

026-01M0788
.81" LONG HEAVY
FLANGED SPACER

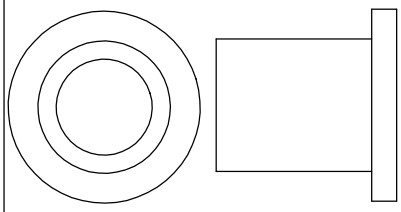

026-01M0780
.65" LONG HEAVY
FLANGED SPACER

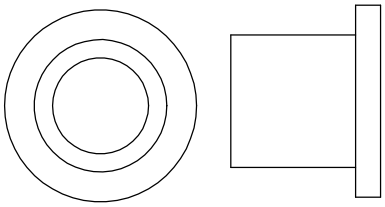

026-01M0761
1 11/16" LONG HEAVY
FLANGED SPACER

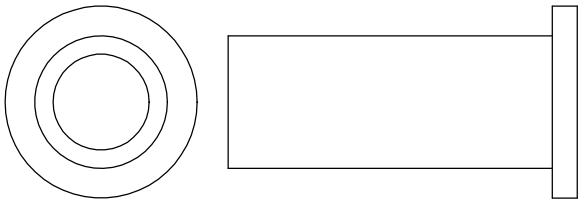

026-01M0789
.44" LONG HEAVY
FLANGED SPACER

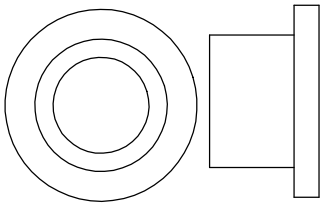

026-01M0762
1 1/2" LONG HEAVY
FLANGED SPACER

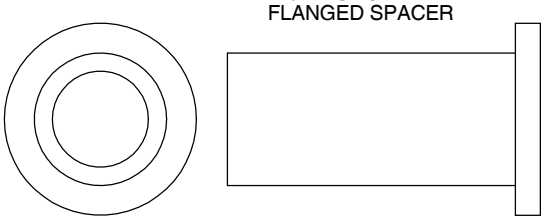

026-01M0768
1 1/4" LONG HEAVY
FLANGED SPACER

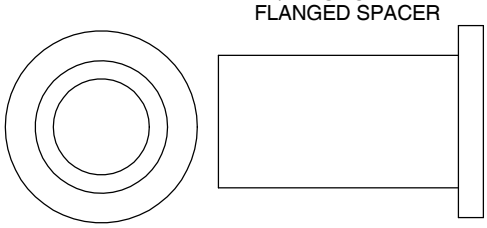

026-01M0600
.625" LONG
FLANGED SPACER

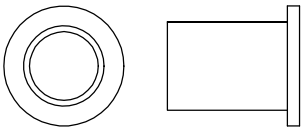

026-01M0240
1 3/8" ALUMINUM
FLATHEAD CAP

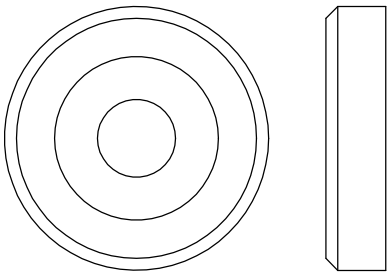

026-01M0239
1 5/8" ALUMINUM
FLATHEAD CAP

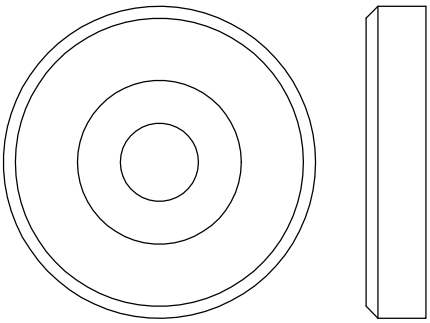

MAINTENANCE SCHEDULE

ROUTINE	*COMMERCIAL / LIGHT COMMERCIAL MAINTENANCE*	*HOME MAINTENANCE*	*LATEST DATE ENTRY*								
Inspect; Links, Pull Pins, Snap Locks, Swivels, Weight Stack Pins	DAILY	WEEKLY									
Clean; Upholstery	DAILY	WEEKLY									
Inspect; Cables or Belts and their tension	DAILY	WEEKLY									
Inspect; Accessory Bars, and Handles	WEEKLY	3 MONTHS									
Inspect; All Decals	WEEKLY	3 MONTHS									
Inspect; All Nuts and Bolts, Tighten if needed	WEEKLY	3 MONTHS									
Inspect; Anti-Skid Surface	WEEKLY	3 MONTHS									
Clean & Lubricate; Guide Rods with a Teflon (PTFE) based lubricant (Superlube)	MONTHLY	3 MONTHS									
Lubricate; Seat Sleeves, Turcite Bushings, Linear Bearing	MONTHLY	3 MONTHS									
Clean and Wax; All Glossy Finishes	6 MONTHS	YEARLY									
Repack with Grease; Linear Bearings	6 MONTHS	YEARLY									
Replace; Cables, Belts and Connecting Parts	YEARLY	3 YEARS									

Your equipment comes with a commercial maintenance decal.
For personal, in home use, please follow the home maintenance schedule listed above.

HOIST FITNESS SYSTEMS
GENERAL MAINTENANCE INFORMATION

Links, Pull-Pins, Snap Hooks, Swivels, Weight Stack Pins:

*Check all pieces for signs of visible wear or damage.

*Check springs in snap hooks and pull-pins for proper tension and alignment.

*If the spring sticks or has lost its rigidity, replace it immediately.

Upholstery:

*To ensure prolonged upholstery life and proper hygiene, all upholstered pads should be wiped down with a damp cloth after every workout.

*Periodically take the time to use a mild soap or an approved vinyl upholstery cleaner to deter the onset of cracking or drying. Avoid using any abrasive cleaners or cleaners not intended for use on vinyl.

*Replace ripped or warn upholstery immediately.

*Keep sharp or pointed objects clear of all upholstery.

Decals:

*Inspect and familiarize yourself with any safety warnings or other user information posted on each decal.

Nuts and Bolts:

*Inspect all nuts and bolts for any loosening and tighten if needed.

*Go through a re-tightening sequence periodically to ensure that all hardware is tensioned proper.

Anti-Skid Surfaces:

*These surfaces are designed to supply secure footing and need to be replaced if they appear worn or become slippery.

Belts and Cables:

*Hoist uses only high quality belt, and mil-spec cables.

*Visually inspect the belts and cables for fraying, cracking, peeling or discoloration.

*While the machine is not in use, carefully run your fingers along the belt or cable to feel for thinning or bulging areas.

*Replace belts and cables immediately at the first signs of damage or wear. Do not use equipment until belts or cables have been replaced.

Belt and Cable Tension:

*Referring to the Owners Manual, when belts or cables are used check all bolts attachments to be sure they are properly attached.

*Check slack in cables and re-adjust cable tension if needed.

Seat Sleeves, Guide Rods:

*Wipe down adjusting tubes with a dust free rag before applying lubricant.

*Lubricate seat sleeves and Guide Rods with a Silicon or Teflon based lubricant spray.

Linear Bearings:

*Referring to the Owners Manual carefully disassemble the bearing from its housing and place a finger full of light grease (lithium, super lube, etc.) into the inside of the bearing. Using your finger, press the grease into the ball-bearings and their tracks. repeat until the ball-bearing tracks are full of grease. Insert the shaft back into the bearing and wipe off excess grease.

PLEASE KEEP THIS FOR YOUR RECORDS

WEIGHT TRAINING TIPS

Use this manual to guide you through the basic exercises you can perform on your CL-3601 HOIST® Fitness System. To gain maximum results and avoid possible injury, consult a fitness professional to develop your complete exercise program.

Always consult your physician before starting any exercise program.

To be successful in your exercise program, it is important to develop an understanding of the basic principles of strength training. Now that you have your CL-3601 HOIST® Fitness System, it is only natural that you want to get started immediately. First, determine a set of realistic goals and objectives for yourself. By deciding on an exercise plan that is right for you prior to starting, you will contribute significantly to your success.

Warm up properly before engaging in weight resistance training. Stretching, yoga, jogging, calisthenics or other cardiovascular exercise can help prepare your body for the heavier workload of lifting weights.

Learn how to perform the exercise correctly before using heavy weight. Correct form is important to avoid injury and to ensure that you work the proper muscle groups.

Know your limitations. If you are new to weight training or are embarking on an exercise regimen after a long layoff, start slowly and build foundational strength over a longer period of time.

Pay attention to your breathing. Exhale when you exert is a general rule of thumb. Never hold your breath.

Enjoy your CL-3601 HOIST® Fitness System!

THIS PAGE WAS INTENTIONALLY LEFT BLANK

WEIGHT TRAINING EXERCISE LOG

S = Sets R = Repetition per set W = Weight used

Date																								
Exercise	S	R	W	S	R	W	S	R	W	S	R	W	S	R	W	S	R	W	S	R	W	S	R	W	S	R	W	S	R	W	S	R	W	S	R	W
Totals																																				

HOIST FITNESS SYSTEMS
LIMITED LIFETIME WARRANTY

Hoist Fitness Systems warrants this product to the **original purchaser** to be free from defects in workmanship and/or materials under normal use or service. If at any time a component part is defective, Hoist Fitness Systems shall repair or replace it (at Hoist Fitness Systems option) within a reasonable period of time. This warranty does not cover costs of removal, transportation or reinstallation. This warranty shall not apply if the defect was caused by misuse, neglect or normal wear and tear.

WARRANTY CLAIMS. All claims require: Model number, Serial number, Date of installation, and any information supporting the existence of the alleged defect.

To complete Warranty Registration visit:
www.HOISTFITNESS.com
and click on the Warranty Registration link

Starting from the original date of purchase, normal wear and tear shall be considered as the following:

COMMERCIAL USE: All malfunctions of upholstery, grips, and coatings that occur up to one year; all malfunctions of belts, or cables up to one year; all malfunctions of pulleys, bearings, or bushings that occur up to three years. The frame and body components are warranted for ten years, with structural moving parts warranted for five years.

LIGHT COMMERCIAL USE: All malfunctions of upholstery, grips, and coatings that occur up to one year; all malfunctions of belts, or cables up to one year; all malfunctions of pulleys, bearings, or bushings that occur up to three years. The frame and body components are warranted for ten years, with structural moving parts warranted for five years.

HOME USE: All malfunctions of grips, paint, and chrome that occur up to ten years; all malfunctions of electronic components, belts, cables, or upholstery that occur up to ten years; all malfunctions of pulleys, bearings, or bushings that occur up to ten years. The frame and all welded components are warranted for the life of the product.

PLEASE NOTE THAT NOT ALL HOIST PRODUCTS ARE MADE FOR COMMERCIAL USE. Refer to the instructions page of your owners manual or consult with you fitness product dealer to establish if a product is made for commercial use or not. Using a non-commercial product in a commercial setting can result in serious injury or death! Hoist Fitness Systems sole responsibility shall be to repair or replace the component within the terms stated above. Hoist Fitness Systems shall not be liable for any loss or damage of any kind including any incidental or consequential damages resulting, directly or indirectly from any warranty expressed or implied or any other failure of this product.

LIGHT COMMERCIAL USE: Our Light Commercial warranty applies to facilities that **DO NOT** charge monthly membership dues and where the equipment would be used by **no more than 50** people per day. Examples of Light Commercial facilities include hotels, apartment complexes, personal training studios, fire stations, police stations, etc., that meet the criteria stated above.

WHAT IS NOT COVERED BY THIS WARRANTY: Hoist's sole obligation under this warranty is limited to either repair or replacement of parts, subject to the additions below. This warranty neither assumes nor authorizes any person to assume obligations other than expressly covered by this warranty.

NO CONSEQUENTIAL DAMAGES: Hoist is not responsible for economic loss; profit loss; or special, indirect, or consequential damages.

WARRANTY IS NOT TRANSFERABLE: This warranty is not assignable and applies only in favor of the original purchaser/user to whom delivered. Any such assignment or transfer shall void the warranties herein made and shall void all warranties, expressed, implied or statutory, except the one (1) and five (5) year warranties described above. These warranties are exclusive and in lieu of all other warranties, including implied warranty and merchantability or fitness for a particular purpose. There are no warranties which extend beyond the description on the face hereof.

TRANSPORTATION COSTS: Hoist will accept parts covered under this warranty freight collect, provided that shipment has received prior approval. Hoist is not responsible for any other transportation costs, but will ship freight collect parts either repaired or replaced under these warranties.

Hoist Fitness Systems
11900 Community Rd.
Poway, CA. 92064
(800)548-5438

PLEASE KEEP THIS FOR YOUR RECORDS