OWNER'S MANUAL

RPL-5203-A

PLATE-LOADED SEATED MID-ROW

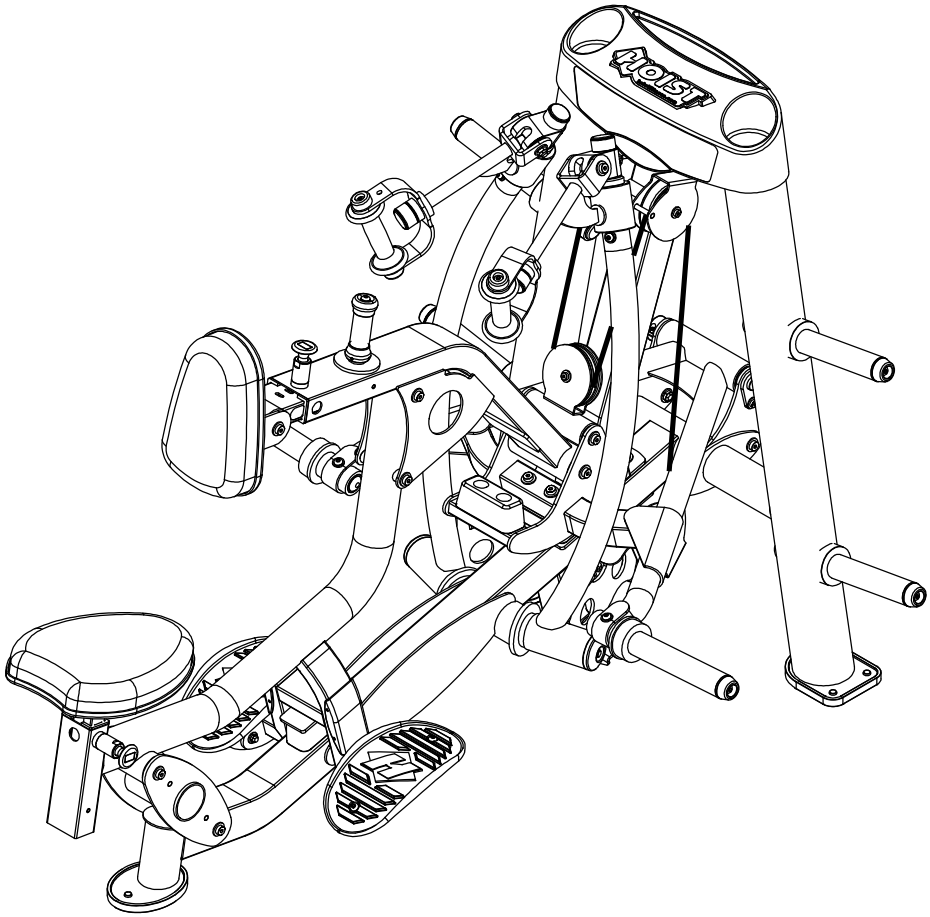

****WARNING!****

TO PREVENT POSSIBLE TIPPING, BOLT THIS UNIT TO THE EXERCISE FLOOR USING MINIMUM 4-1/2" LENGTH BOLTS. FAILURE TO DO SO MAY RESULT IN SERIOUS INJURY OR DEATH.

Note: Both Serial Number and Model Number are Required when Ordering Parts

RECORD SERIAL NUMBER HERE

MACHINE CODE

B08

Customer Service

(800) 548-5438

(858) 578-7676

Fax

(858) 578-9558

www.facebook.com/hoistfitness

CONTENTS

INSTRUCTIONS 02
FRAME ASSEMBLY 04
MACHINE ADJUSTMENT..... 31
PRE-ASSEMBLY..... 32
DECAL PLACEMENT..... 35
DECAL REFERENCE..... 36
PART LIST..... 37
ABBREVIATIONS..... 42
BOLT SIZING CHART..... 43
WASHER SIZING CHART..... 44
MAINTENANCE SCHEDULE..... 46
GENERAL MAINTENANCE INFORMATION..... 47
WEIGHT TRAINING TIPS..... 48
EXERCISE LOG..... 49
LIMITED WARRANTY..... 50

INSTRUCTIONS

Before beginning assembly please take the time to read instructions thoroughly. Please use the various lists in this manual to make sure that all parts have been included in your shipment. When ordering, use part number and description from the lists. Use only HOIST replacement parts when servicing. Failure to do so will void your warranty and could result in personal injury.

HOIST equipment is designed to provide the smoothest, most effective exercise motion possible. After assembly, you should check all functions to ensure correct operation. If you experience problems, first recheck the assembly instructions to locate any possible errors made during assembly. If you are unable to correct the problem, call your authorized HOIST dealer. Be sure to have your serial number and this manual when calling. When all parts have been accounted for, continue on.

TOOLS REQUIRED

Ratchet Wrench

1/2", 9/16" and 3/4" Sockets

Adjustable Wrench

Rubber Mallet

Tape Measure

Level

Hex Key Wrench Set

Two People

ACCESSORIES INCLUDED

SuperLube

THIS PAGE WAS INTENTIONALLY LEFT BLANK

FRAME ASSEMBLY

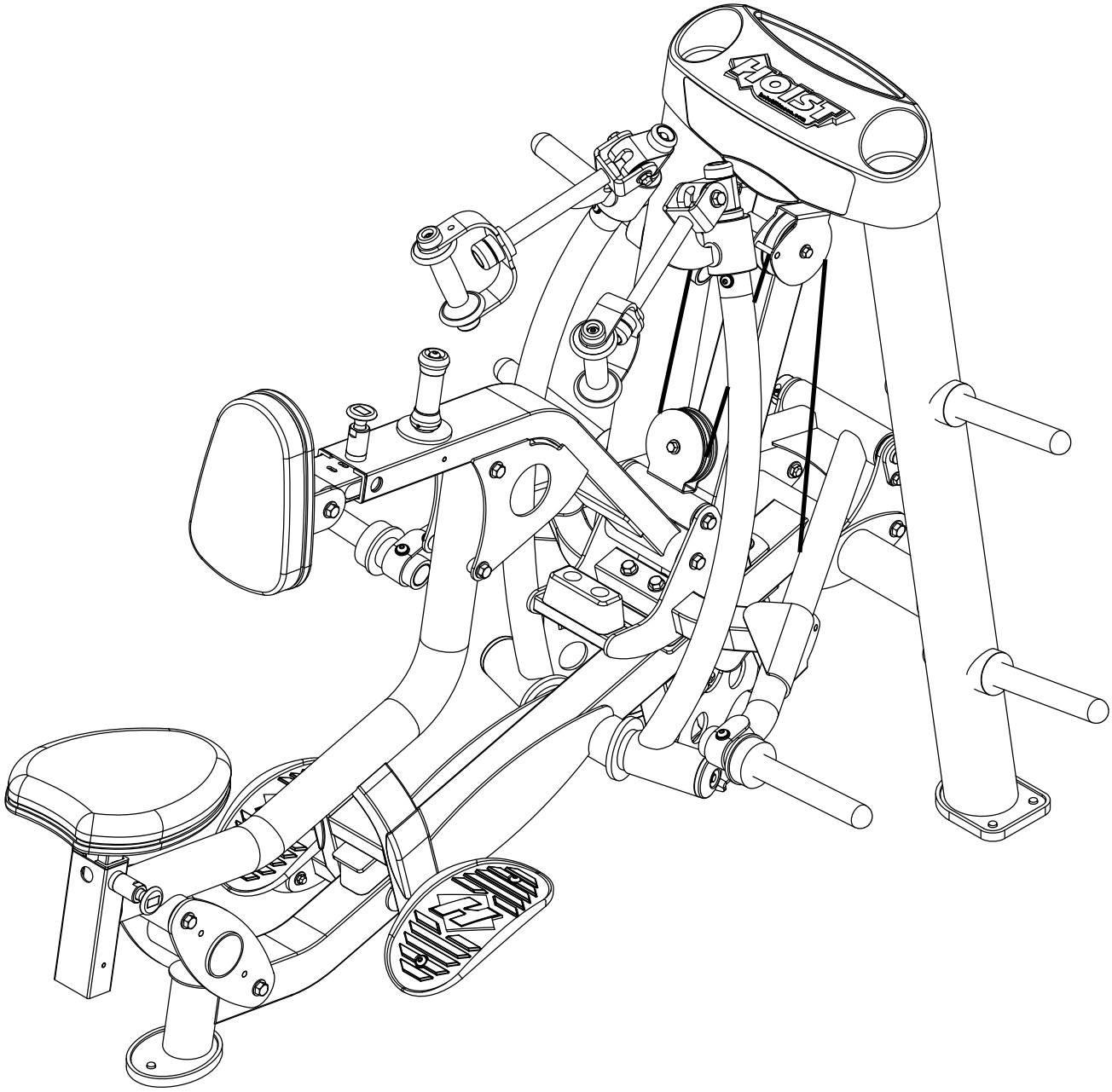

FRAME ASSEMBLY

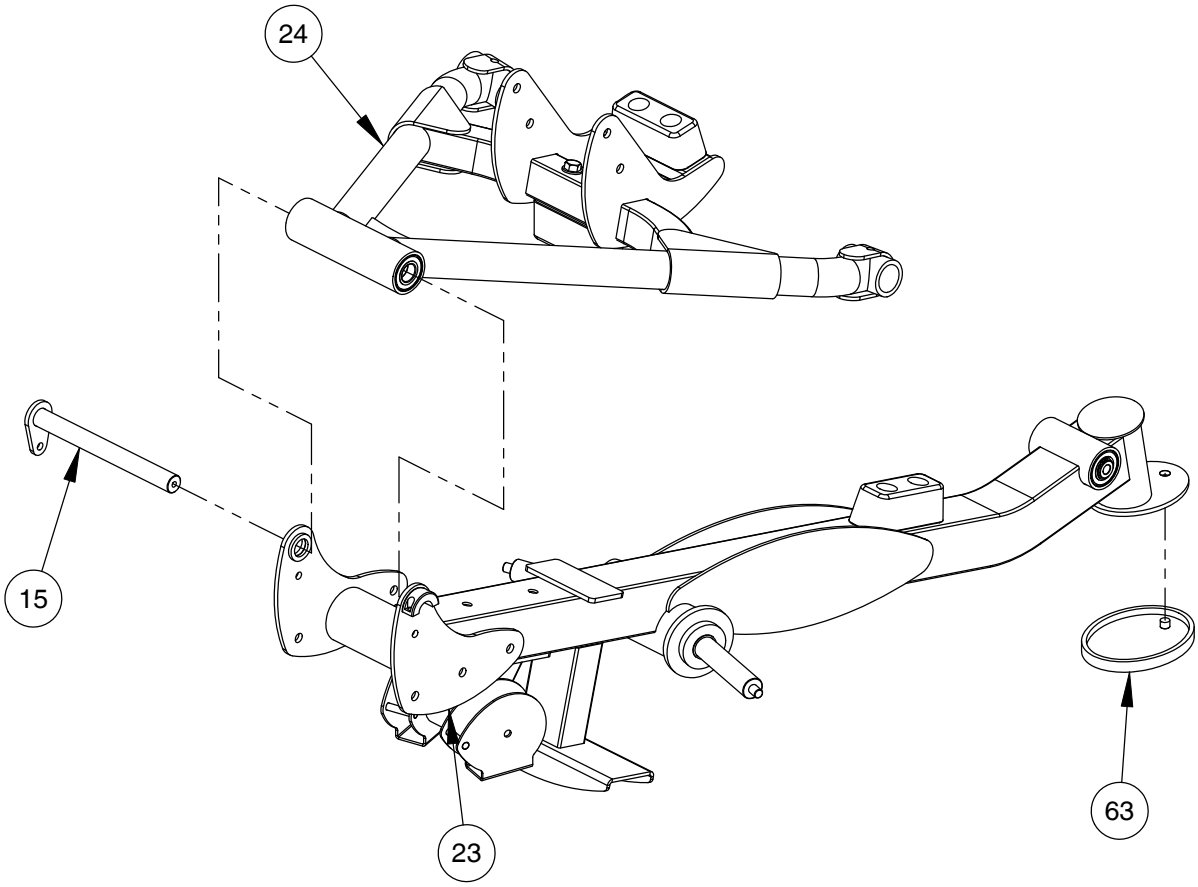

FRAME ASSEMBLY

NOTE:
- WRENCH TIGHTEN HARDWARE.

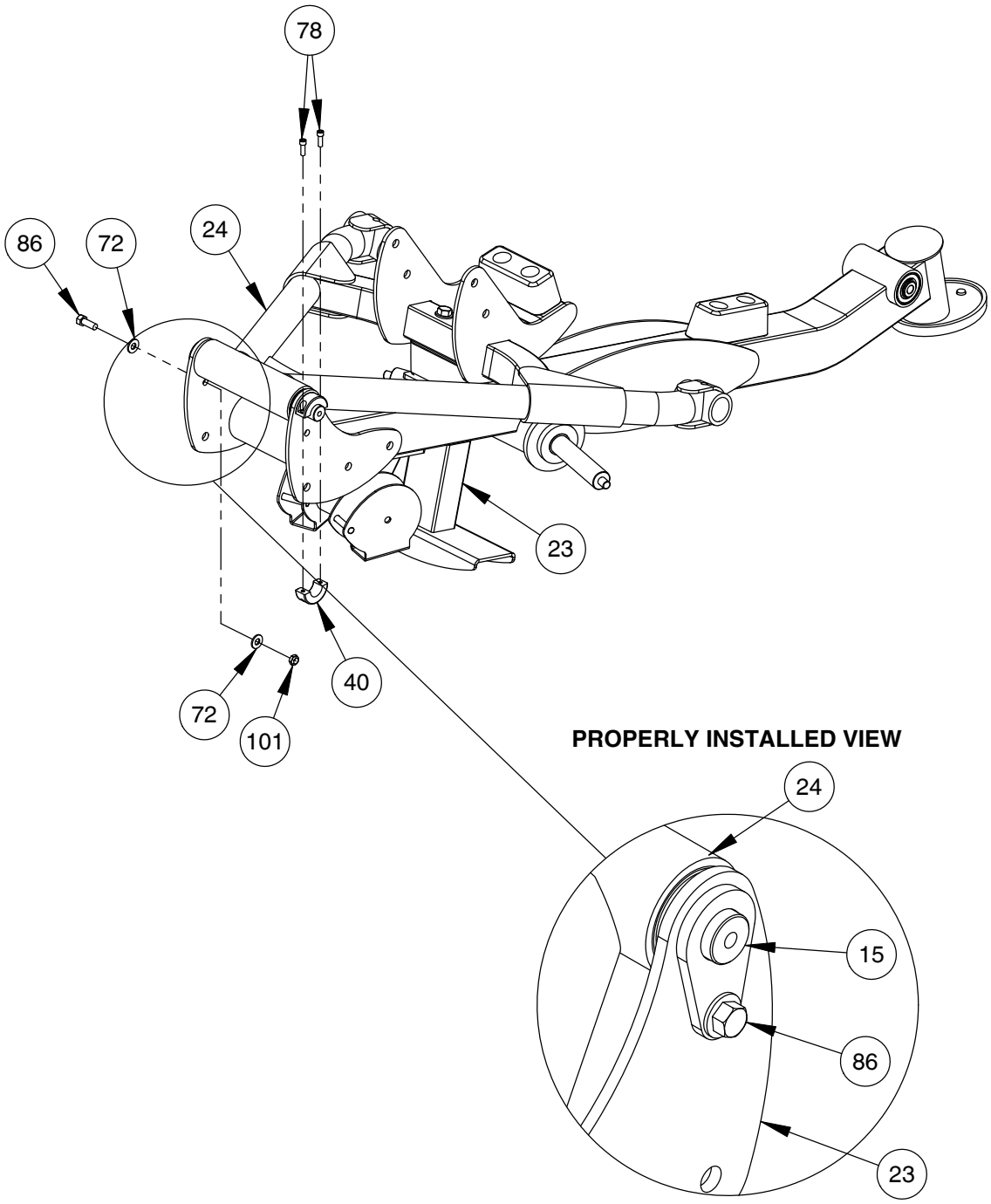

FRAME ASSEMBLY

NOTE:
- HAND TIGHTEN HARDWARE.
- SOME PARTS MAY HAVE BEEN REMOVED FOR CLARITY.

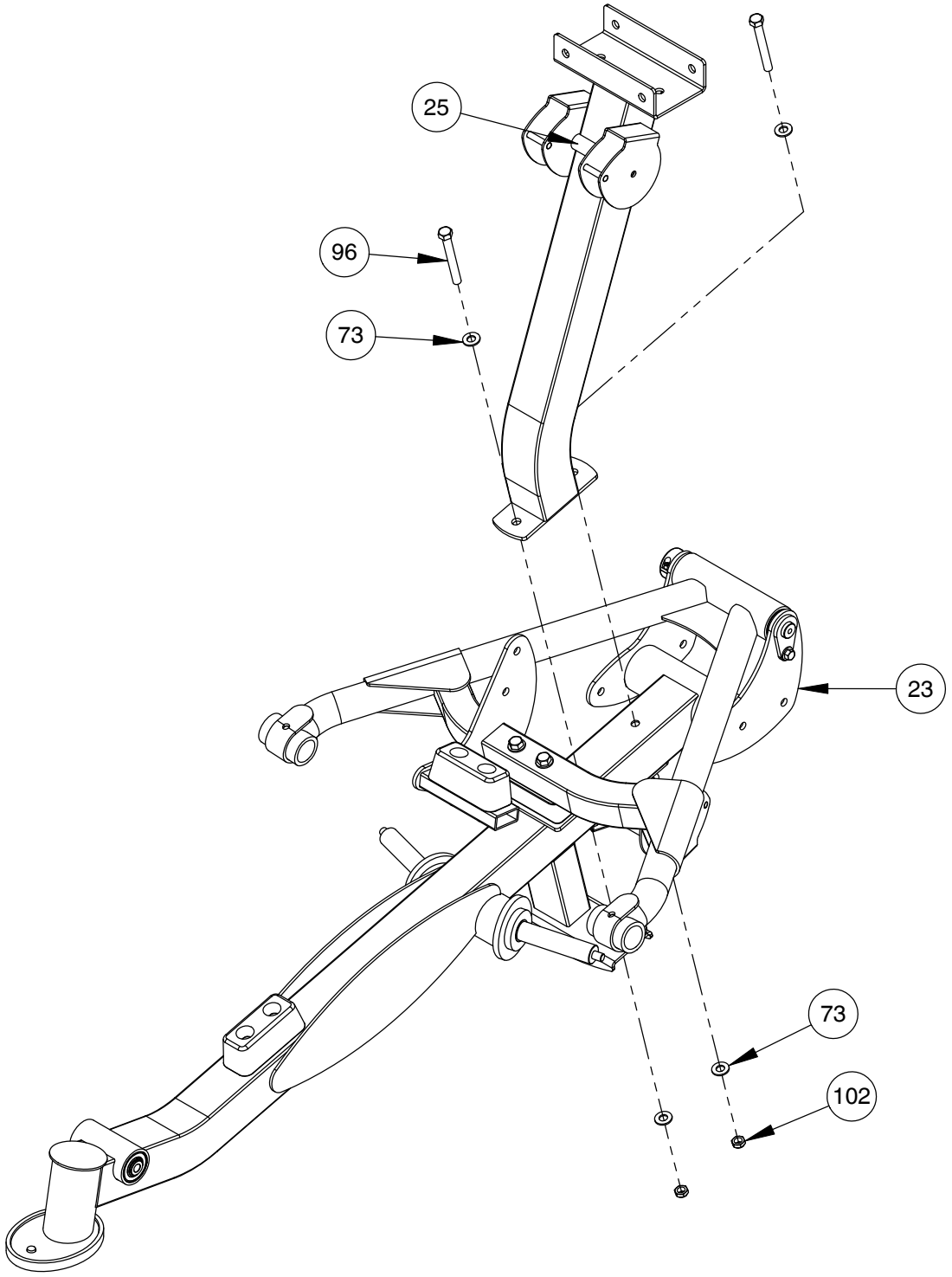

FRAME ASSEMBLY

NOTE:
- HAND TIGHTEN HARDWARE.

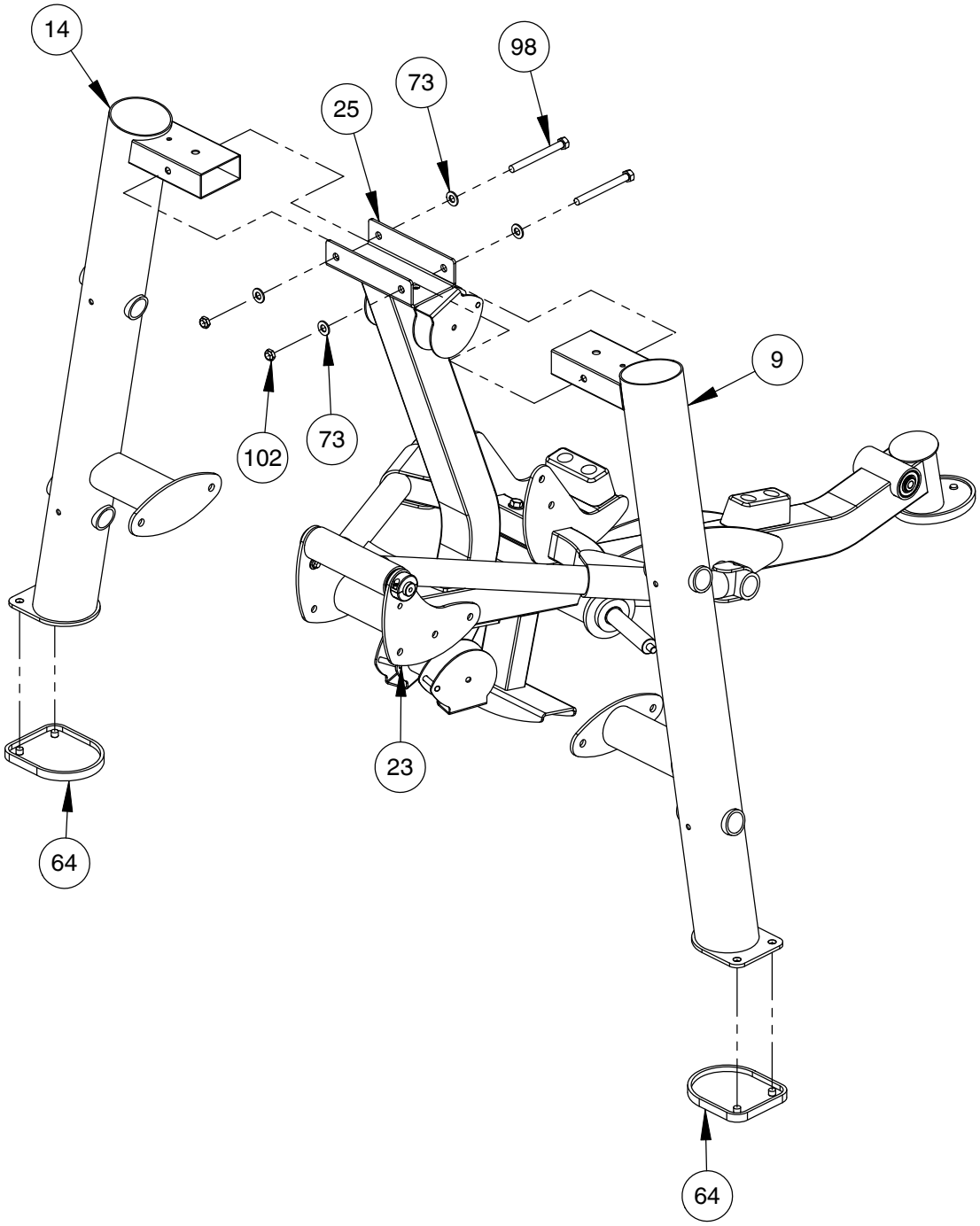

FRAME ASSEMBLY

NOTE:
- HAND TIGHTEN HARDWARE.
- REPEAT ASSEMBLY FOR OPPOSITE SIDE.

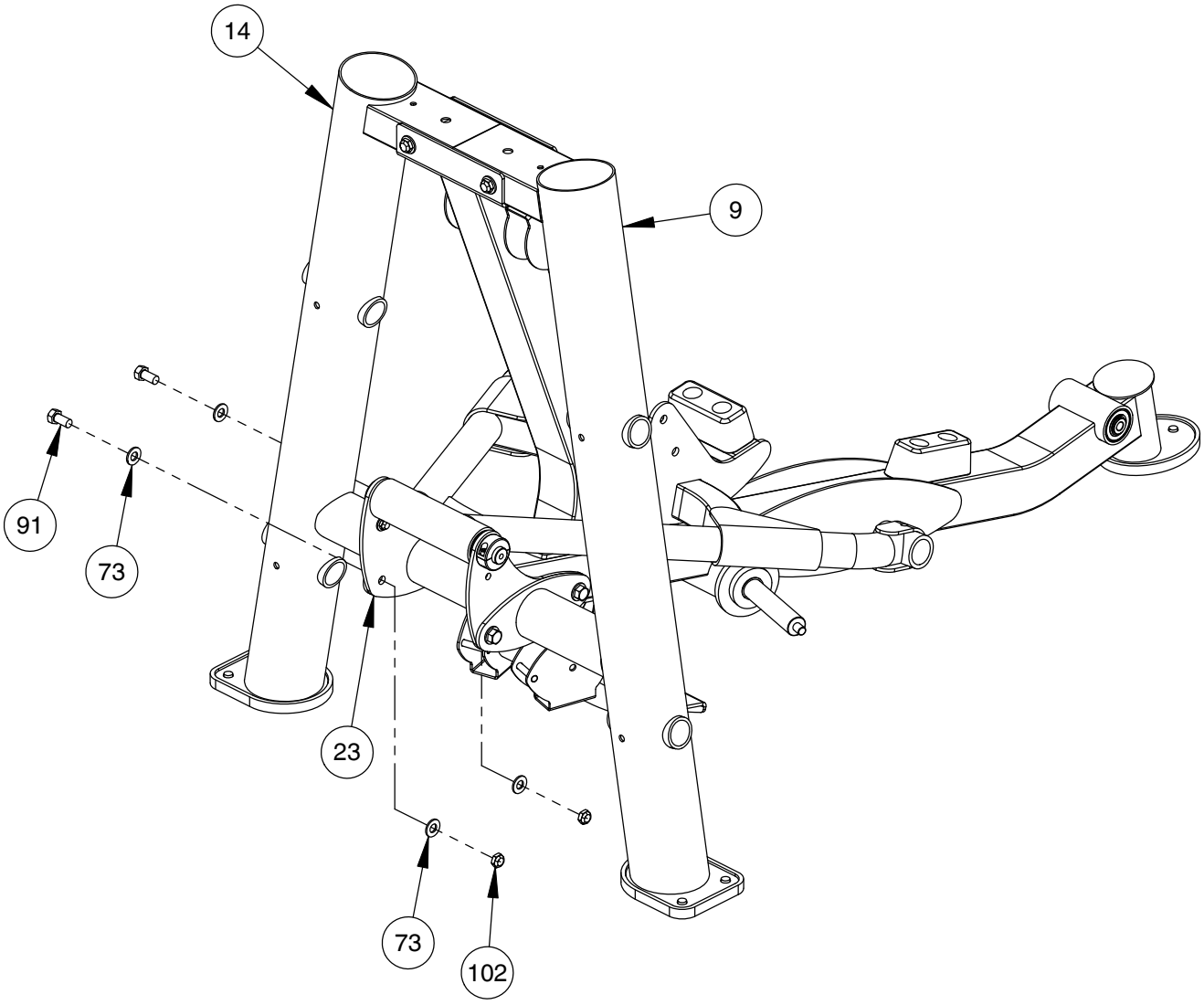

FRAME ASSEMBLY

NOTE:
- WRENCH TIGHTEN HARDWARE.
- WRENCH TIGHTEN ALL PREVIOUSLY HAND TIGHTENED HARDWARE.

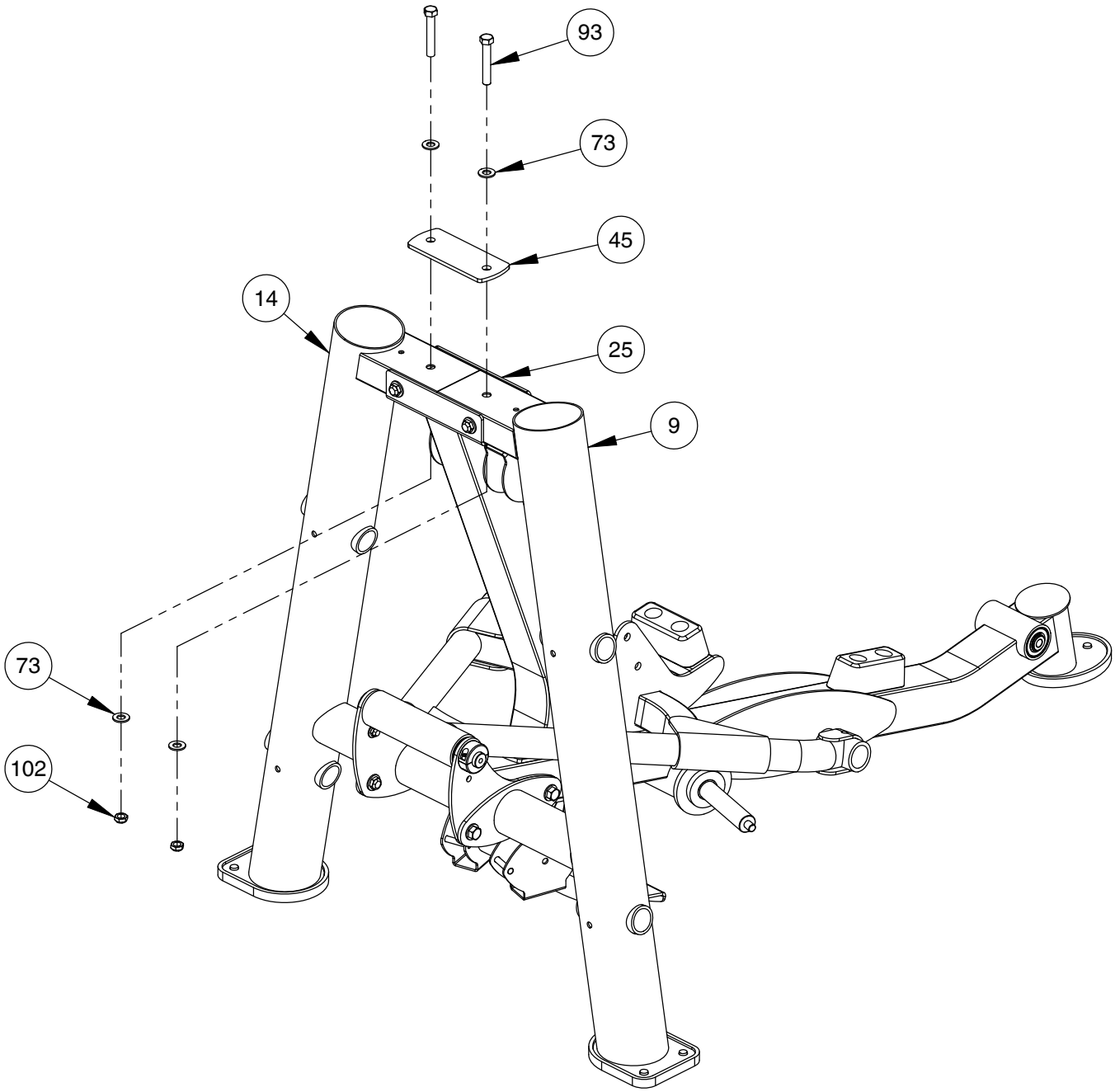

FRAME ASSEMBLY

NOTE:
- WRENCH TIGHTEN HARDWARE.

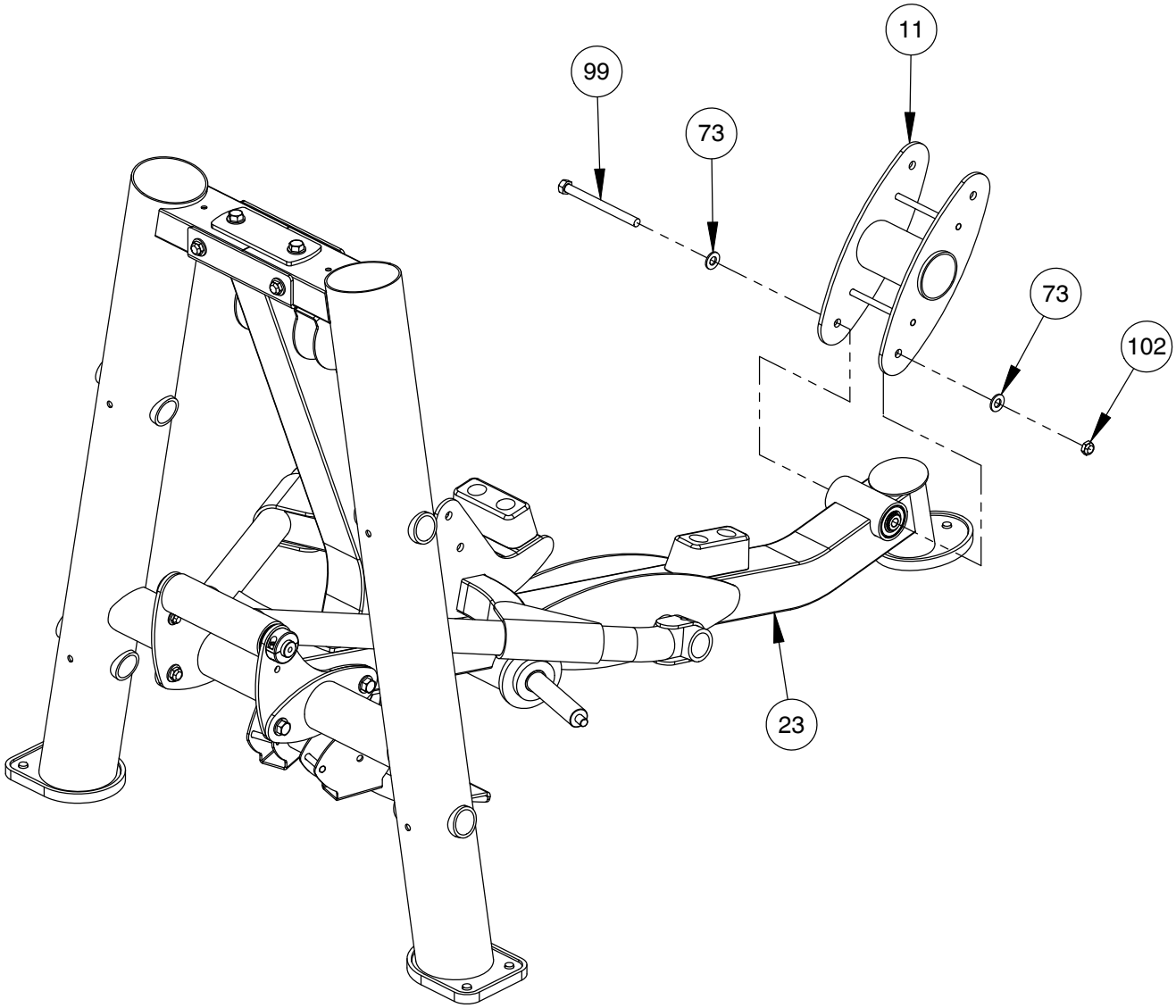

FRAME ASSEMBLY

NOTE:
- WRENCH TIGHTEN HARDWARE.

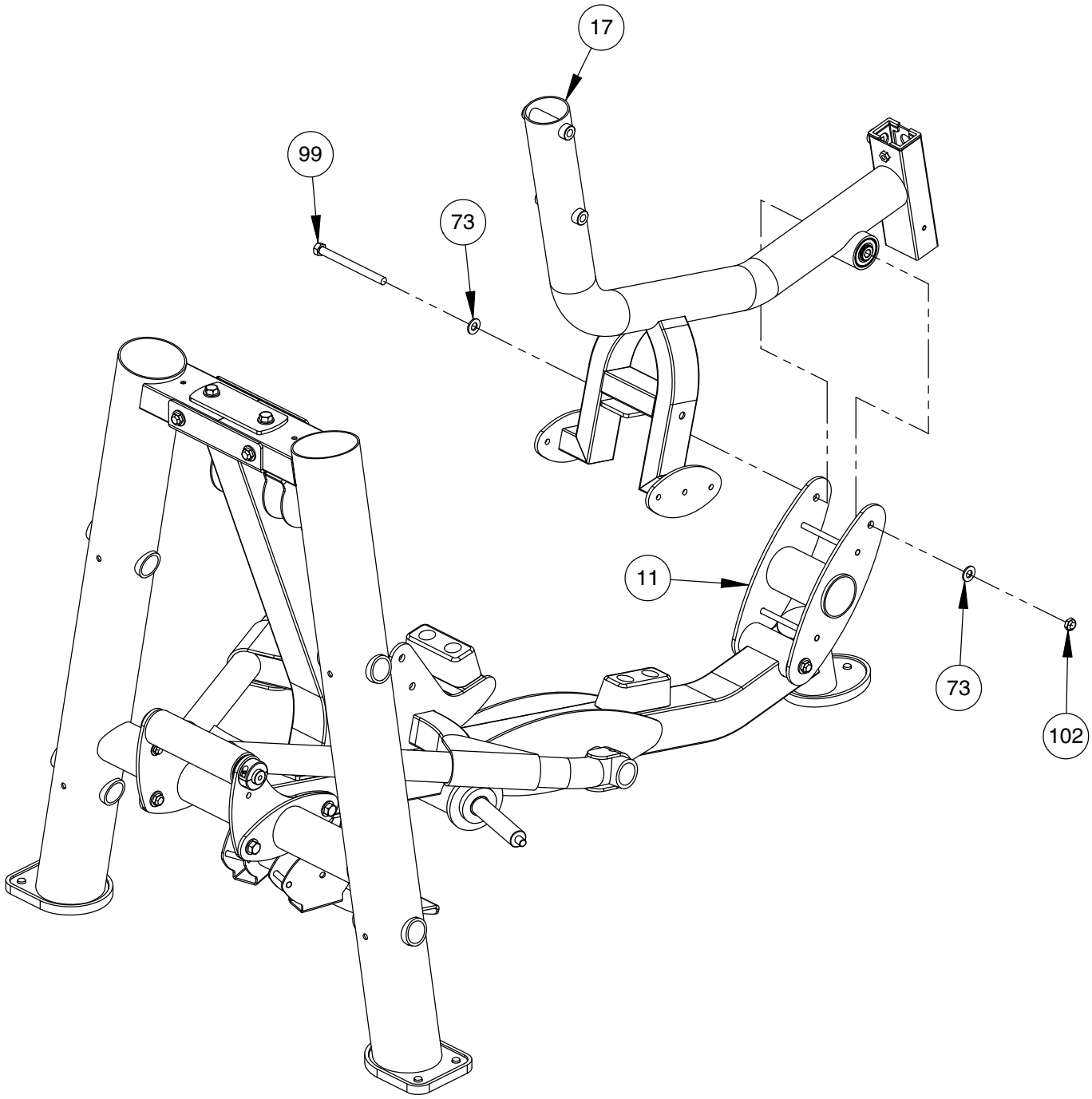

FRAME ASSEMBLY

NOTE:
- WRENCH TIGHTEN HARDWARE.

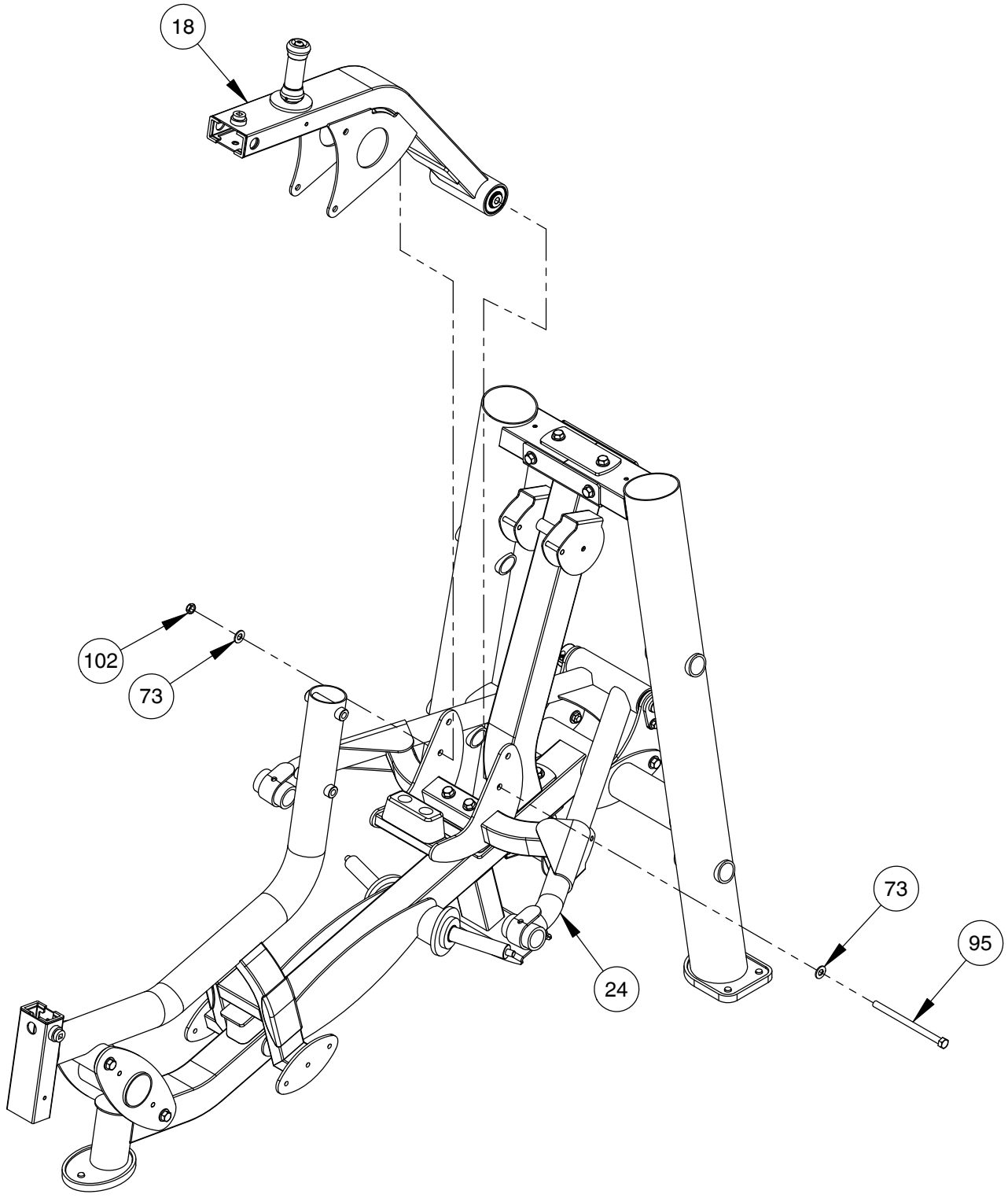

FRAME ASSEMBLY

NOTE:
- WRENCH TIGHTEN HARDWARE.

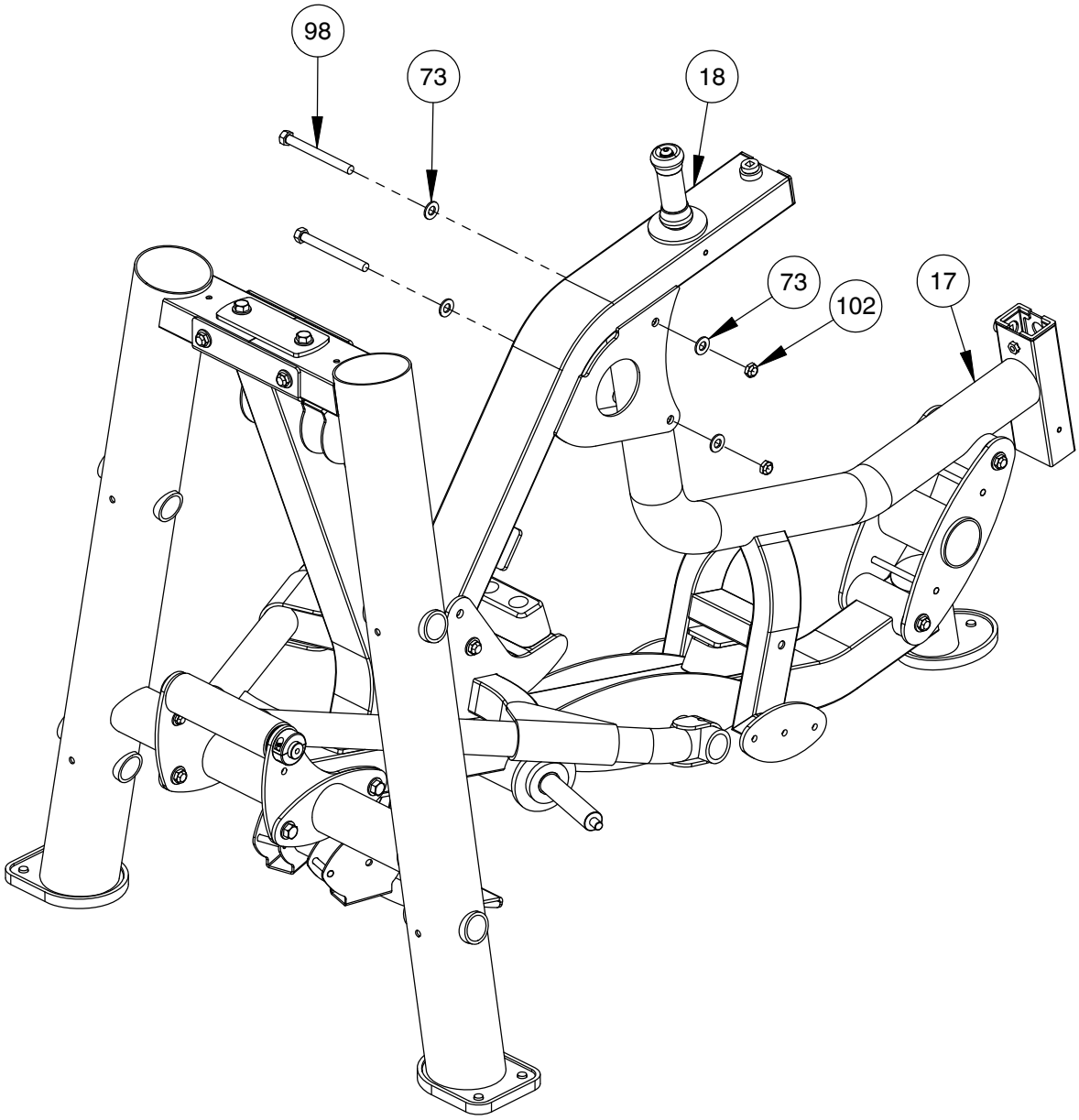

FRAME ASSEMBLY

NOTE:
- WRENCH TIGHTEN HARDWARE.
- SOME PARTS MAY HAVE BEEN REMOVED FOR CLARITY.

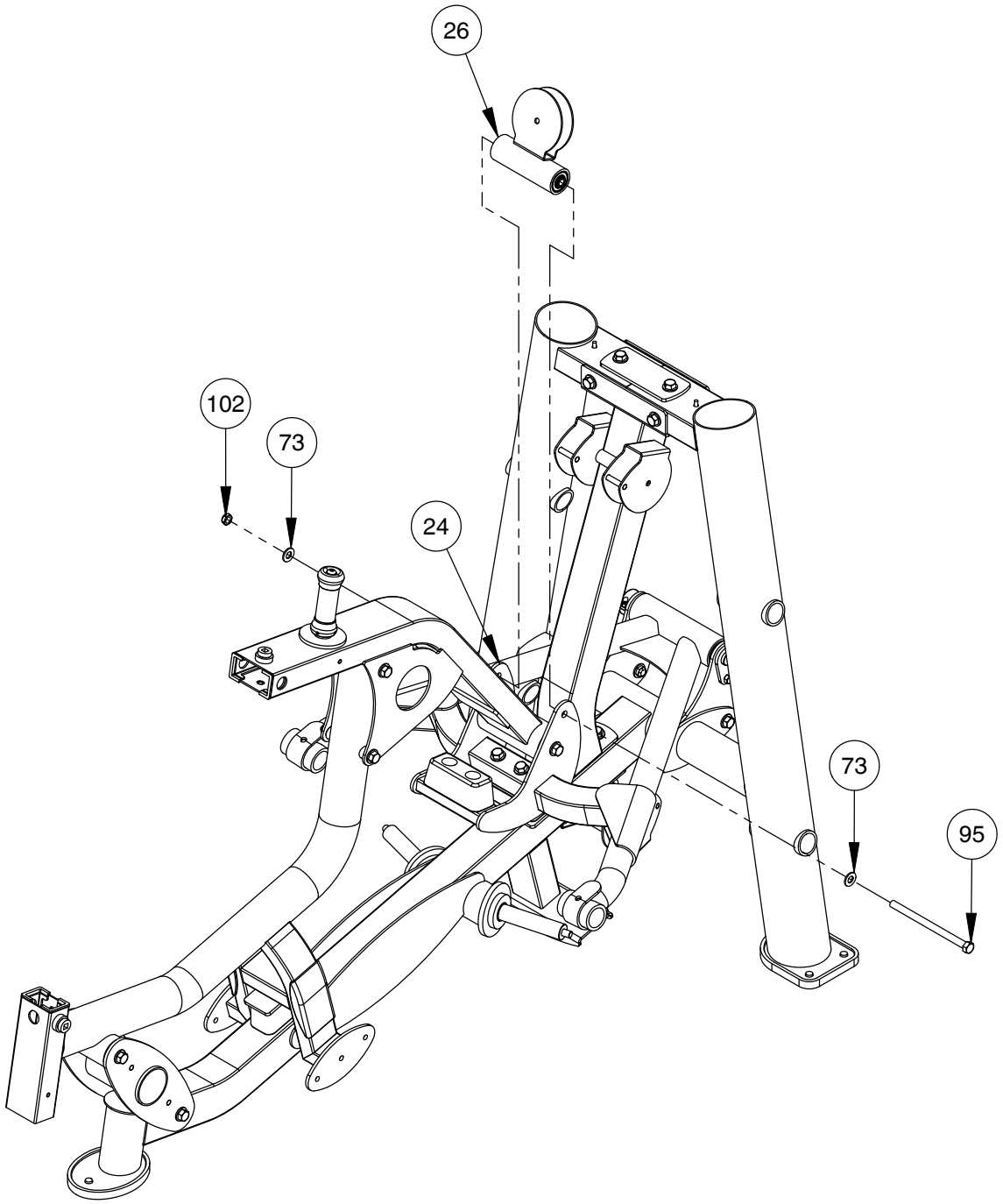

FRAME ASSEMBLY

NOTE:
- WRENCH TIGHTEN HARDWARE.
- REPEAT ASSEMBLY FOR OPPOSITE SIDE.

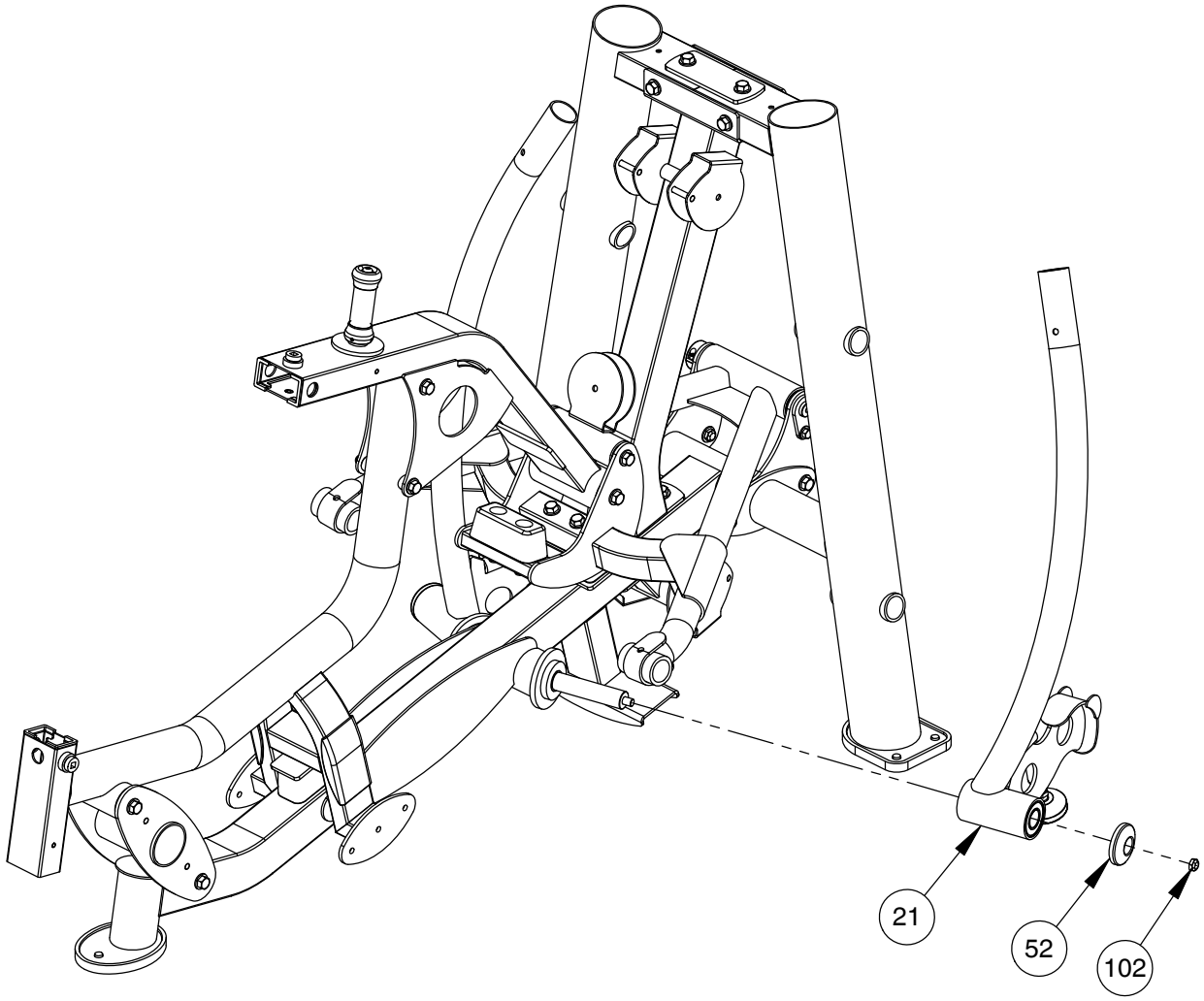

FRAME ASSEMBLY

NOTE:
- WRENCH TIGHTEN HARDWARE.
- REPEAT ASSEMBLY FOR OPPOSITE SIDE.
- REFER TO PAGE 31 FOR SPECIFIC MACHINE ADJUSTMENT INFORMATION.
- SOME PARTS MAY HAVE BEEN REMOVED FOR CLARITY.

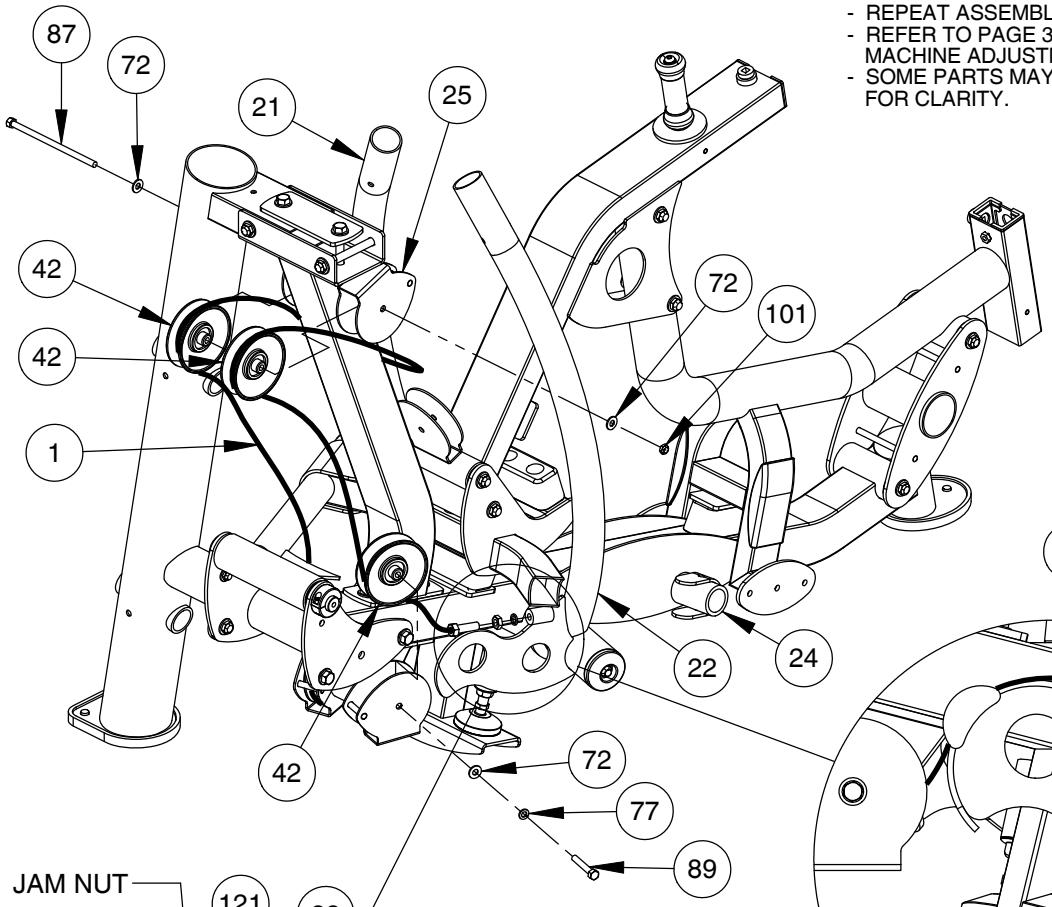

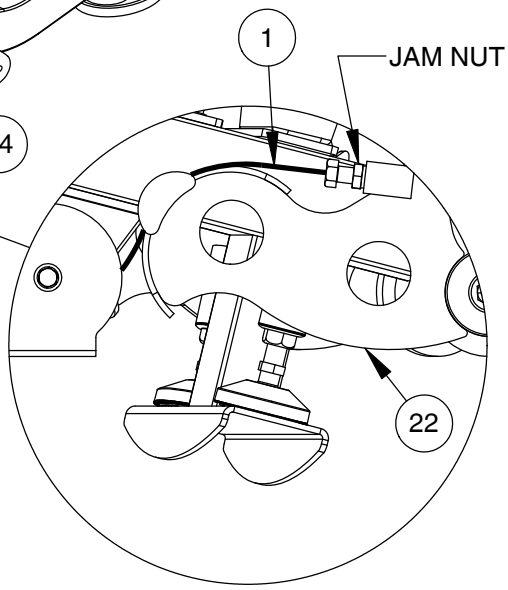

PROPERLY INSTALLED VIEW

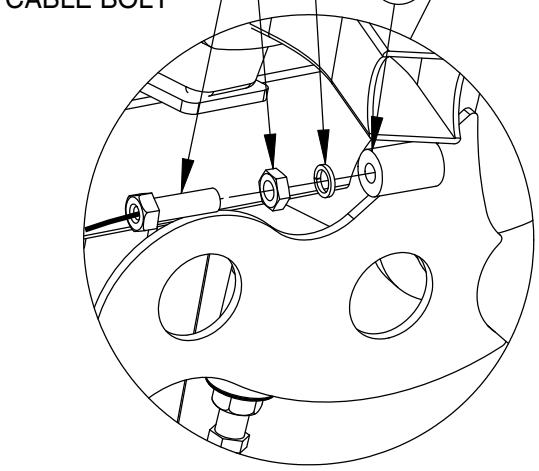

FINE TUNING:
LOOSEN JAM NUT AND THREAD BOLT IN/OUT TO GIVE THE CABLE PROPER TENSION. RE-TIGHTEN JAM NUT.

WARNING - CABLE BOLT MUST BE THREADED A MINIMUM OF 3/8" WITH JAM NUT TIGHTENED SECURELY TO ENSURE PROPER CONNECTION.

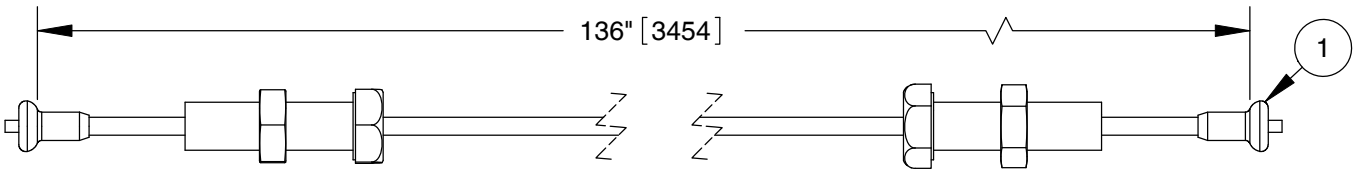

FRAME ASSEMBLY

NOTE:
- WRENCH TIGHTEN HARDWARE.
- SOME PARTS MAY HAVE BEEN REMOVED FOR CLARITY.

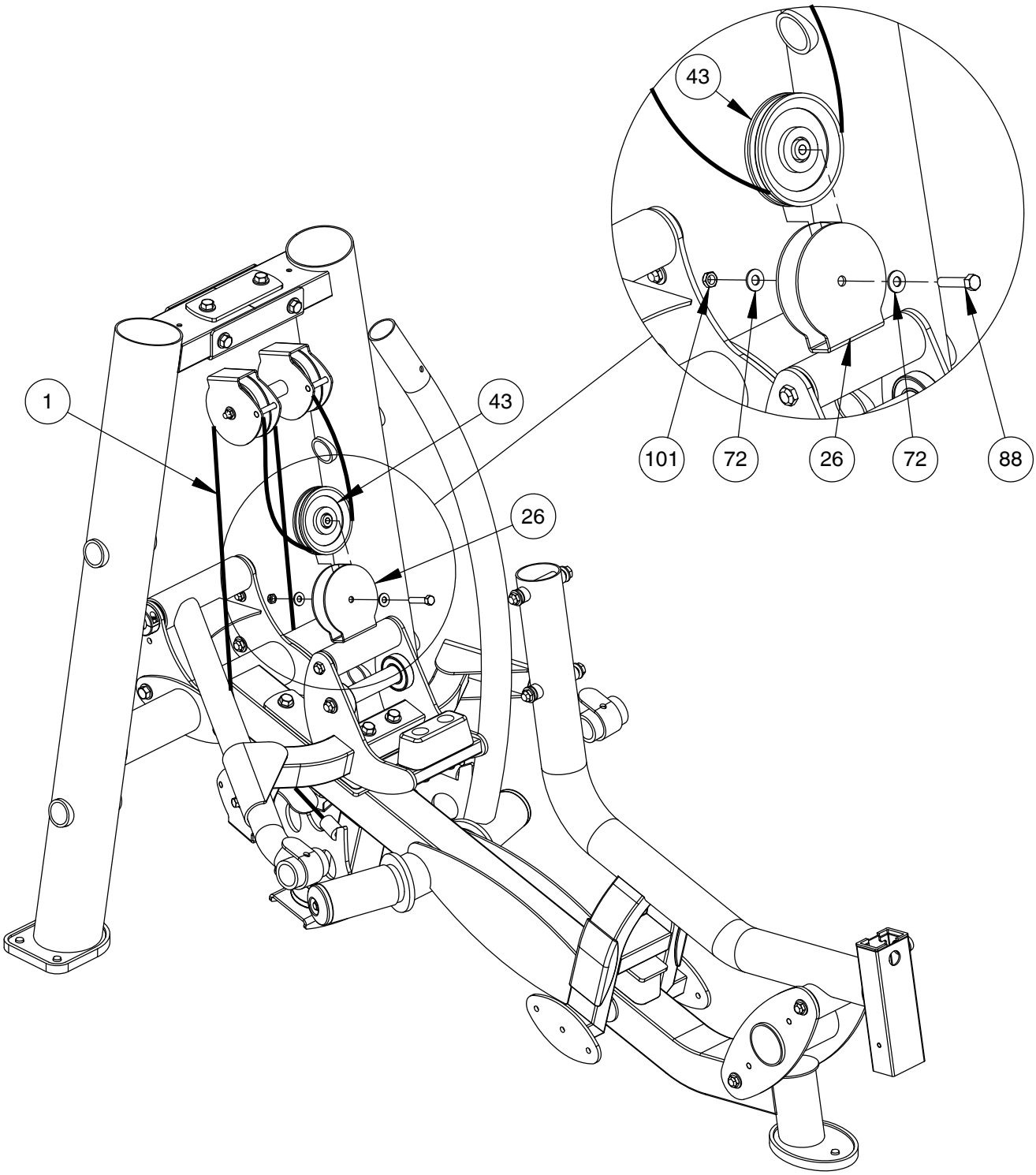

FRAME ASSEMBLY

PROPERLY INSTALLED VIEW

NOTE:
- WRENCH TIGHTEN HARDWARE.
- REPEAT ASSEMBLY FOR OPPOSITE SIDE.
- SOME PARTS MAY HAVE BEEN REMOVED FOR CLARITY.

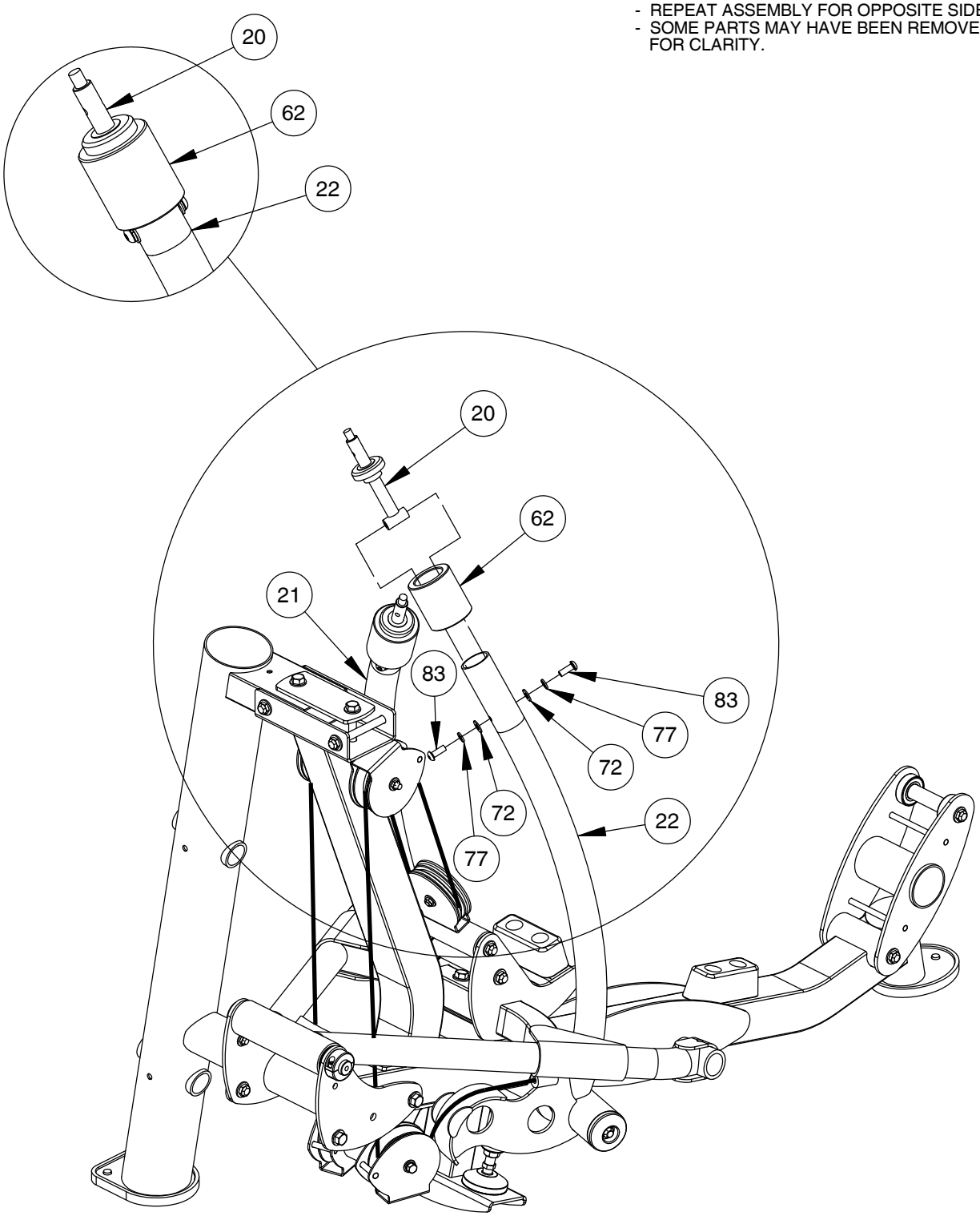

FRAME ASSEMBLY

NOTE:
- WRENCH TIGHTEN HARDWARE.
- REPEAT ASSEMBLY FOR OPPOSITE SIDE.

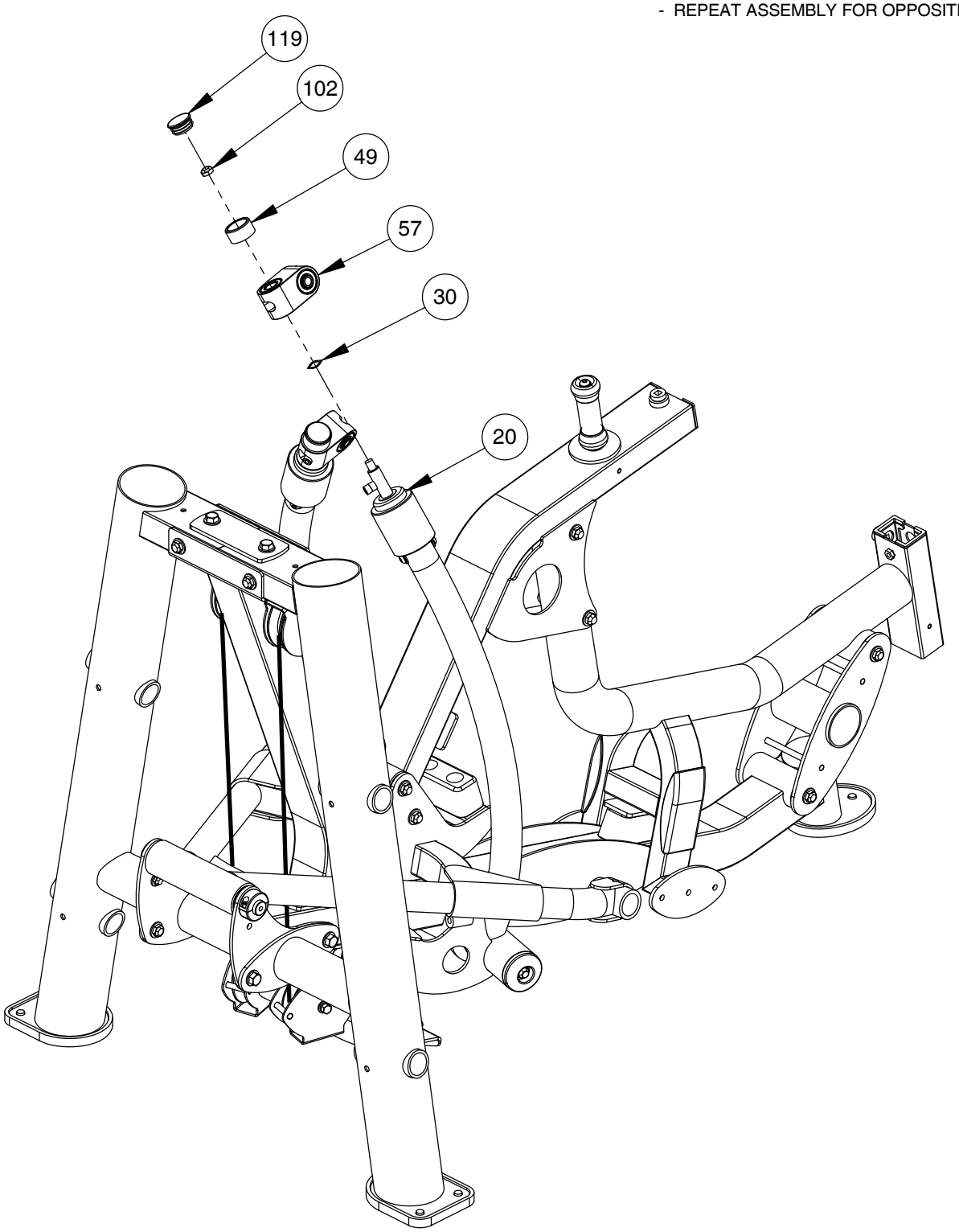

FRAME ASSEMBLY

NOTE:
- WRENCH TIGHTEN HARDWARE.
- REPEAT ASSEMBLY FOR OPPOSITE SIDE.

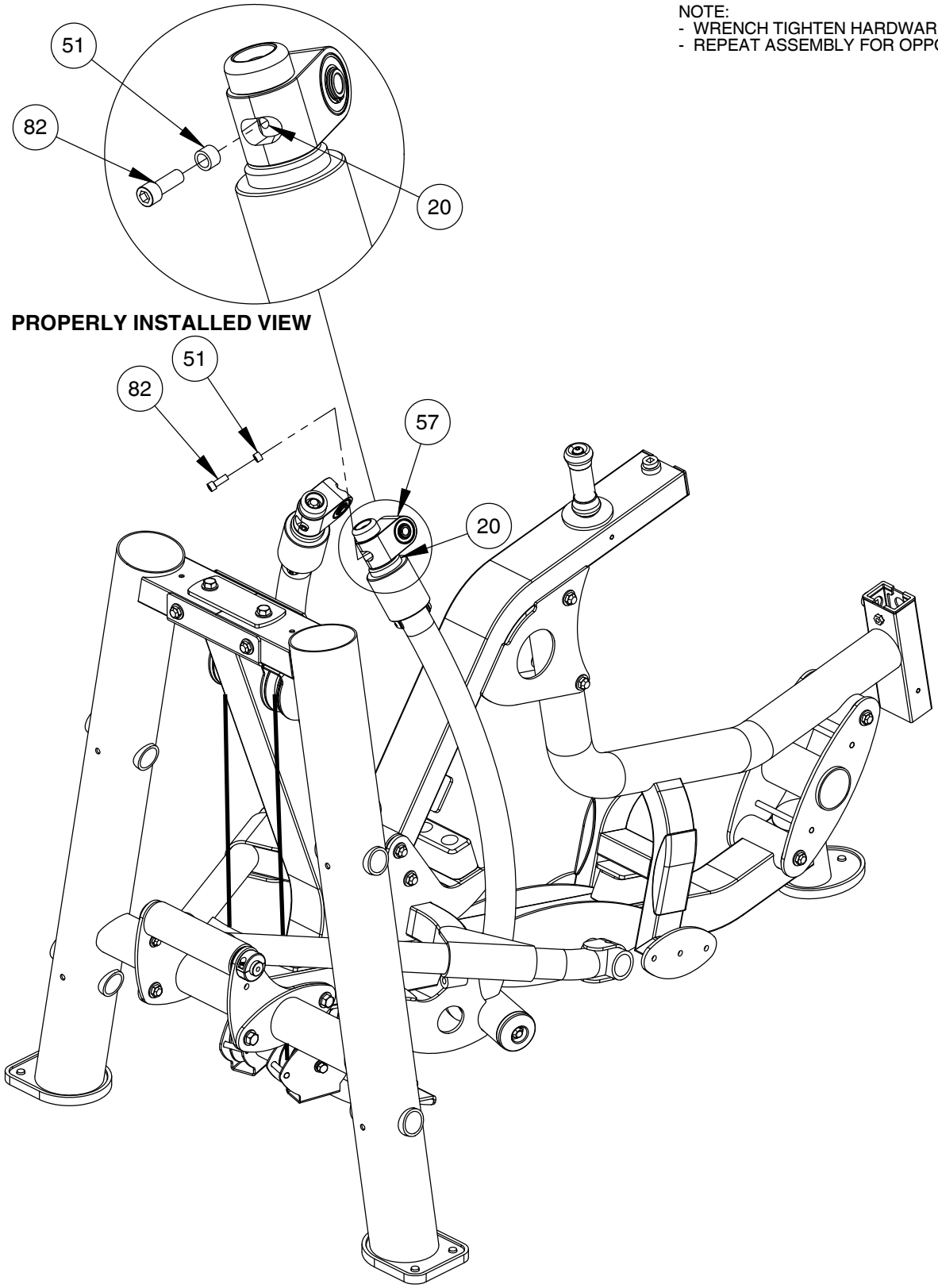

FRAME ASSEMBLY

NOTE:
- WRENCH TIGHTEN HARDWARE.
- REPEAT ASSEMBLY FOR OPPOSITE SIDE.

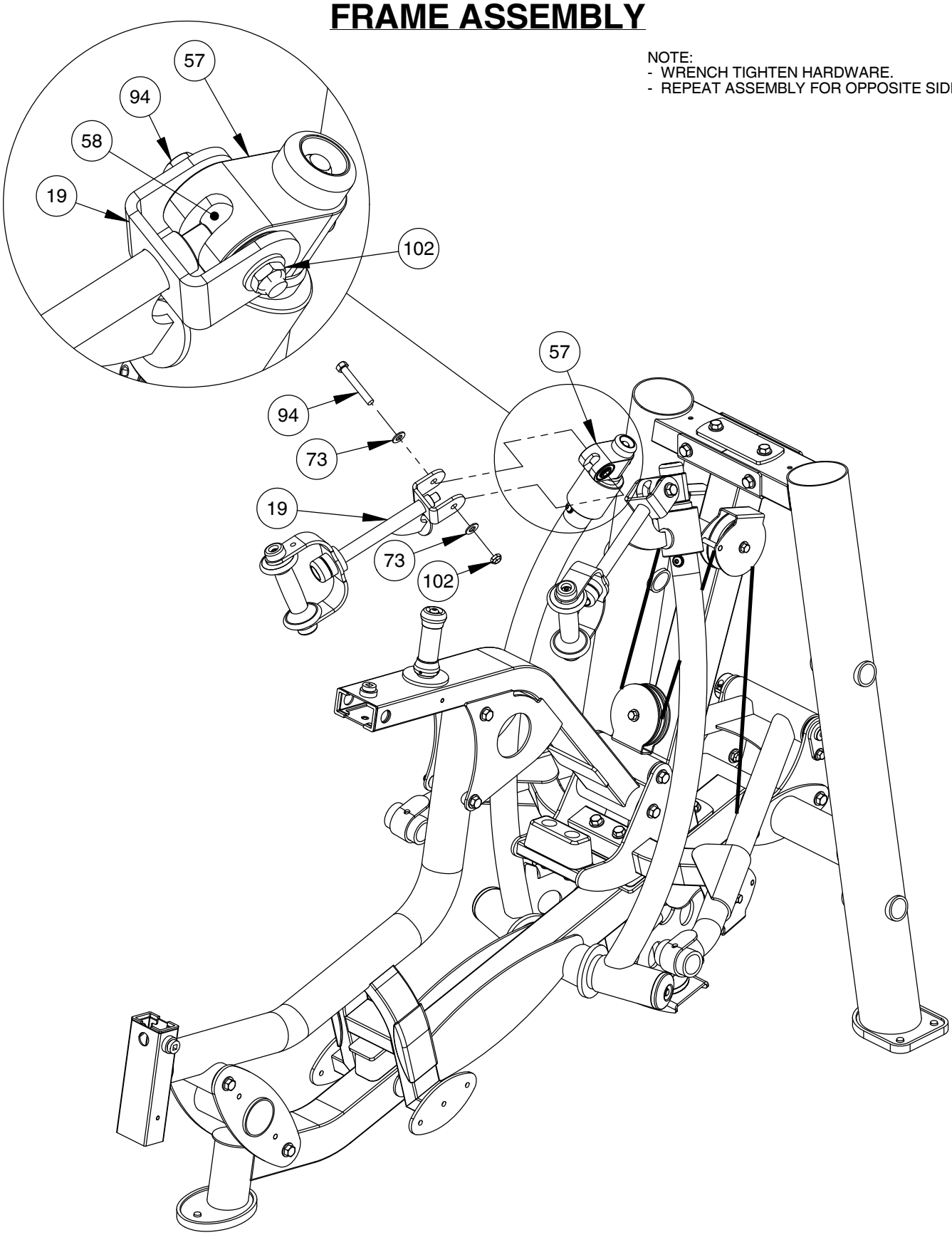

FRAME ASSEMBLY

NOTE:
- WRENCH TIGHTEN HARDWARE.

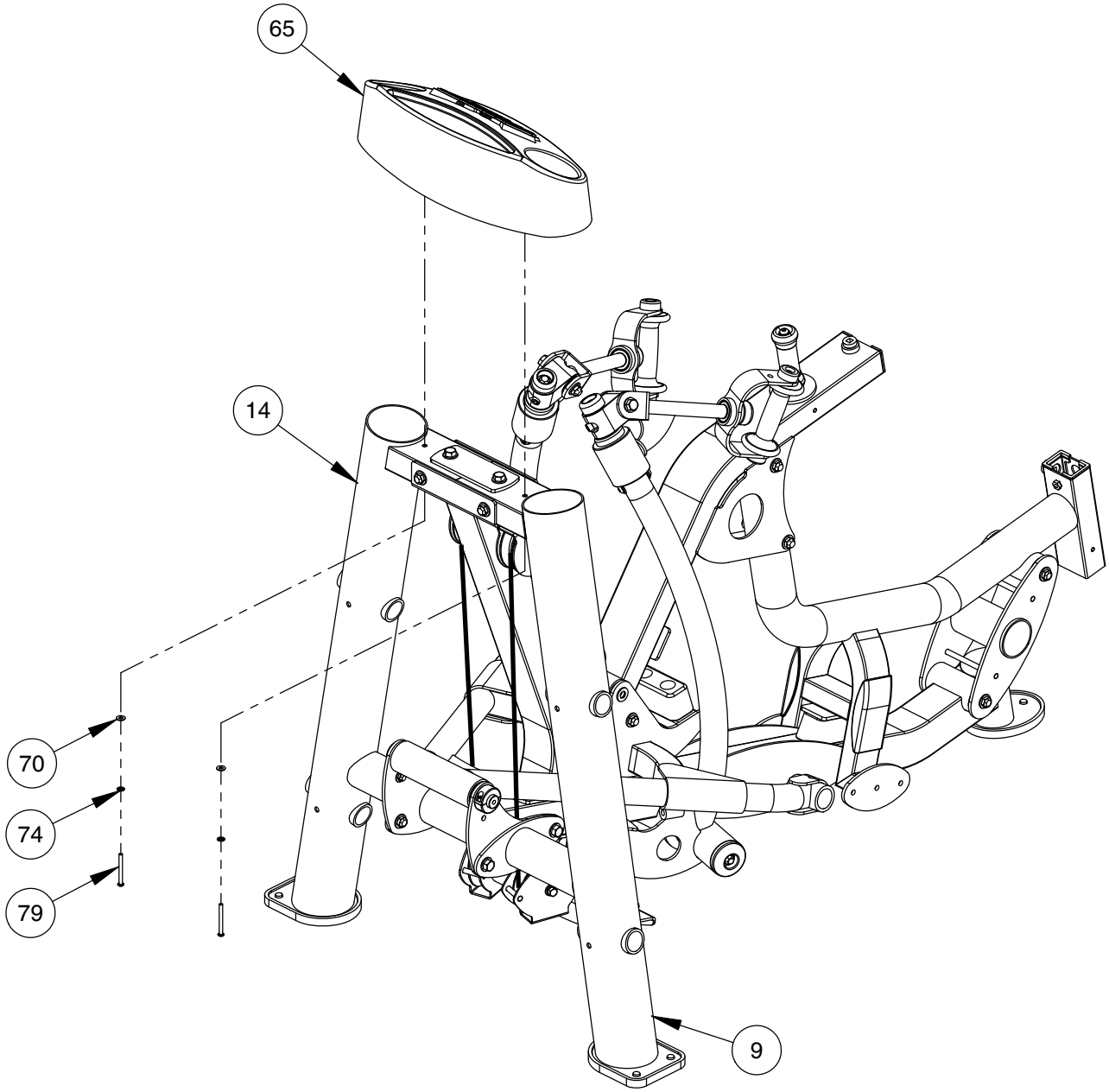

FRAME ASSEMBLY

NOTE:
- WRENCH TIGHTEN HARDWARE.
- REPEAT ASSEMBLY FOR OPPOSITE SIDE.

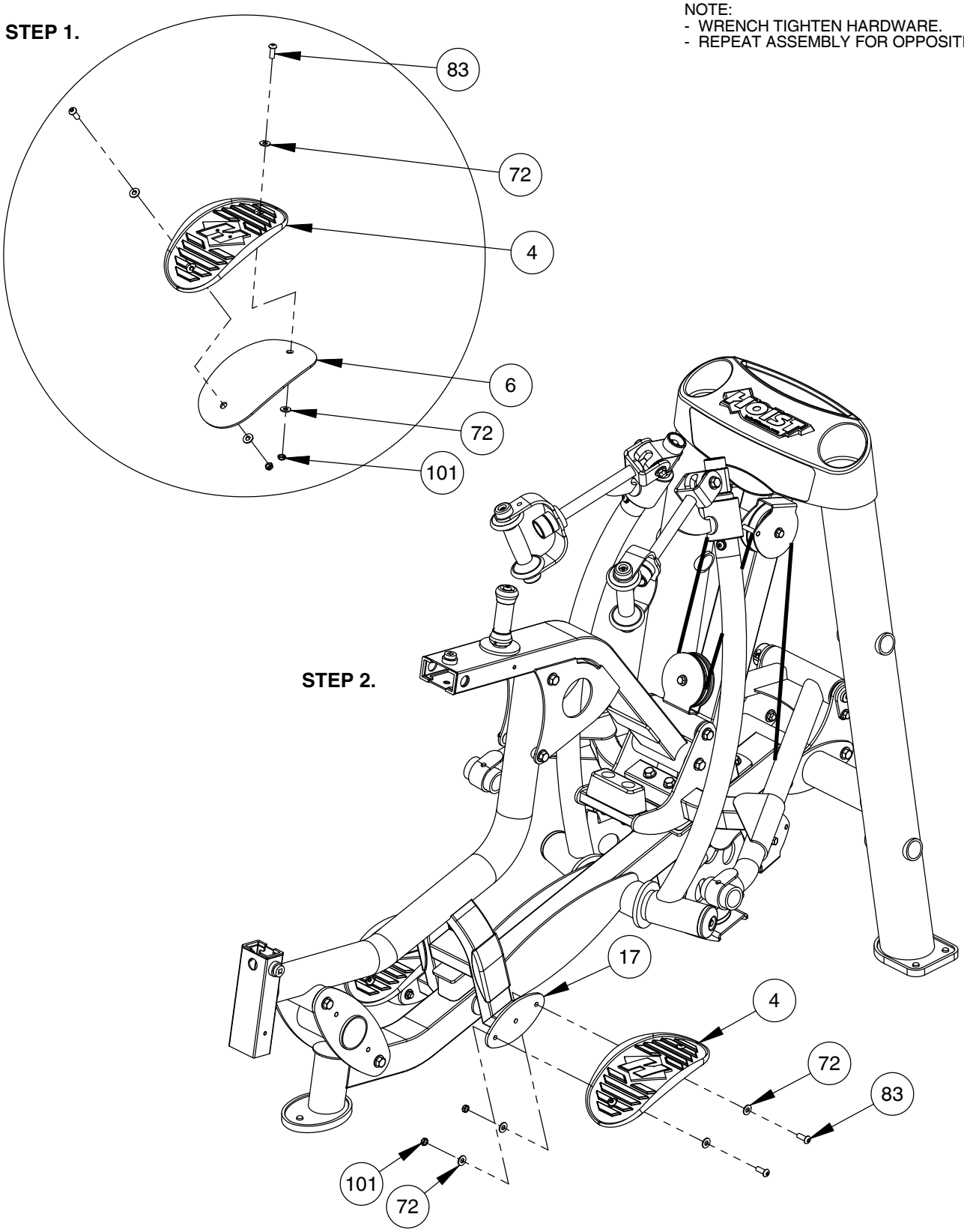

FRAME ASSEMBLY

NOTE:
- WRENCH TIGHTEN HARDWARE.
- REPEAT ASSEMBLY FOR OPPOSITE SIDE.
- SOME PARTS MAY HAVE BEEN REMOVED FOR CLARITY.

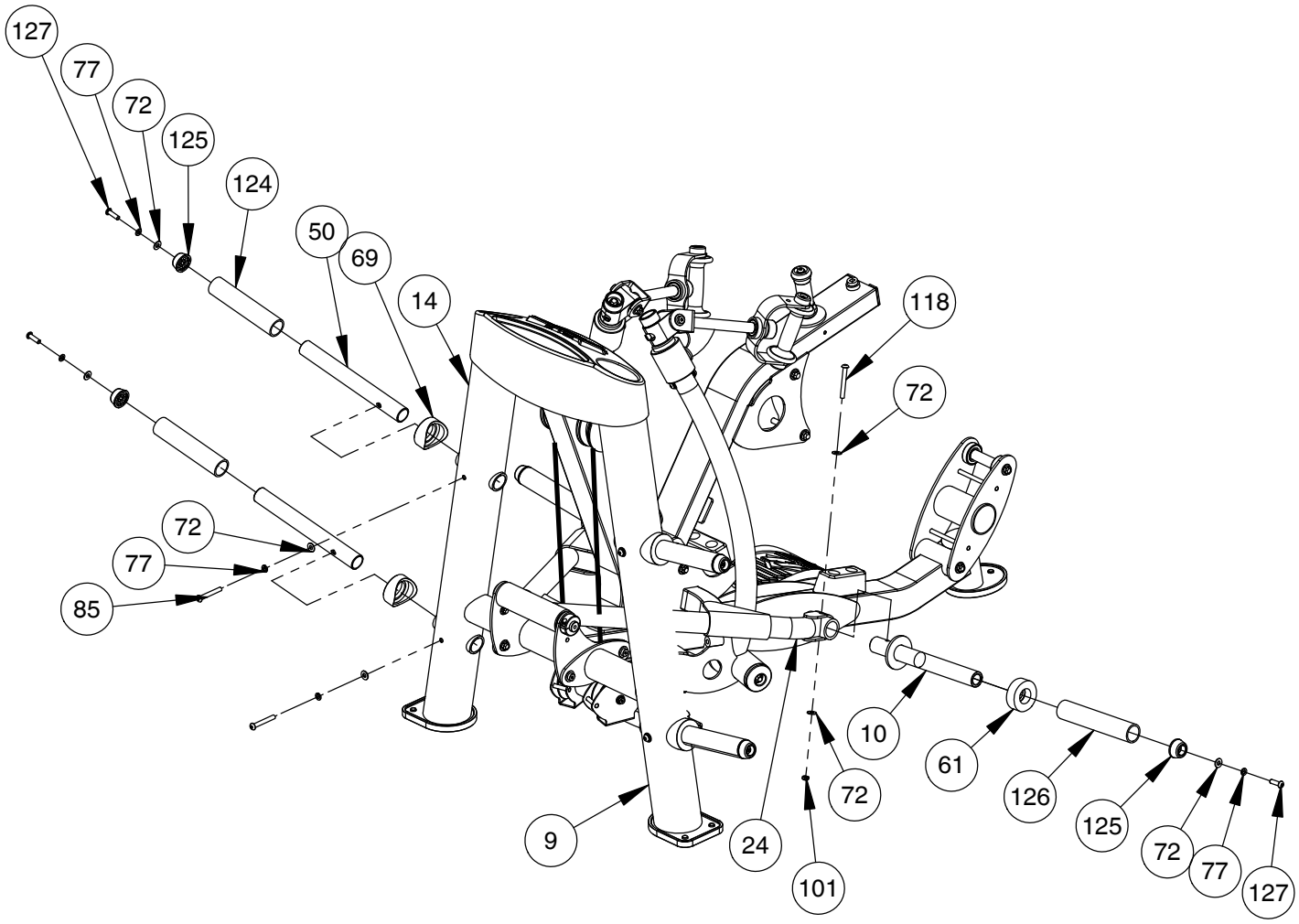

FRAME ASSEMBLY

NOTE:
- WRENCH TIGHTEN HARDWARE.

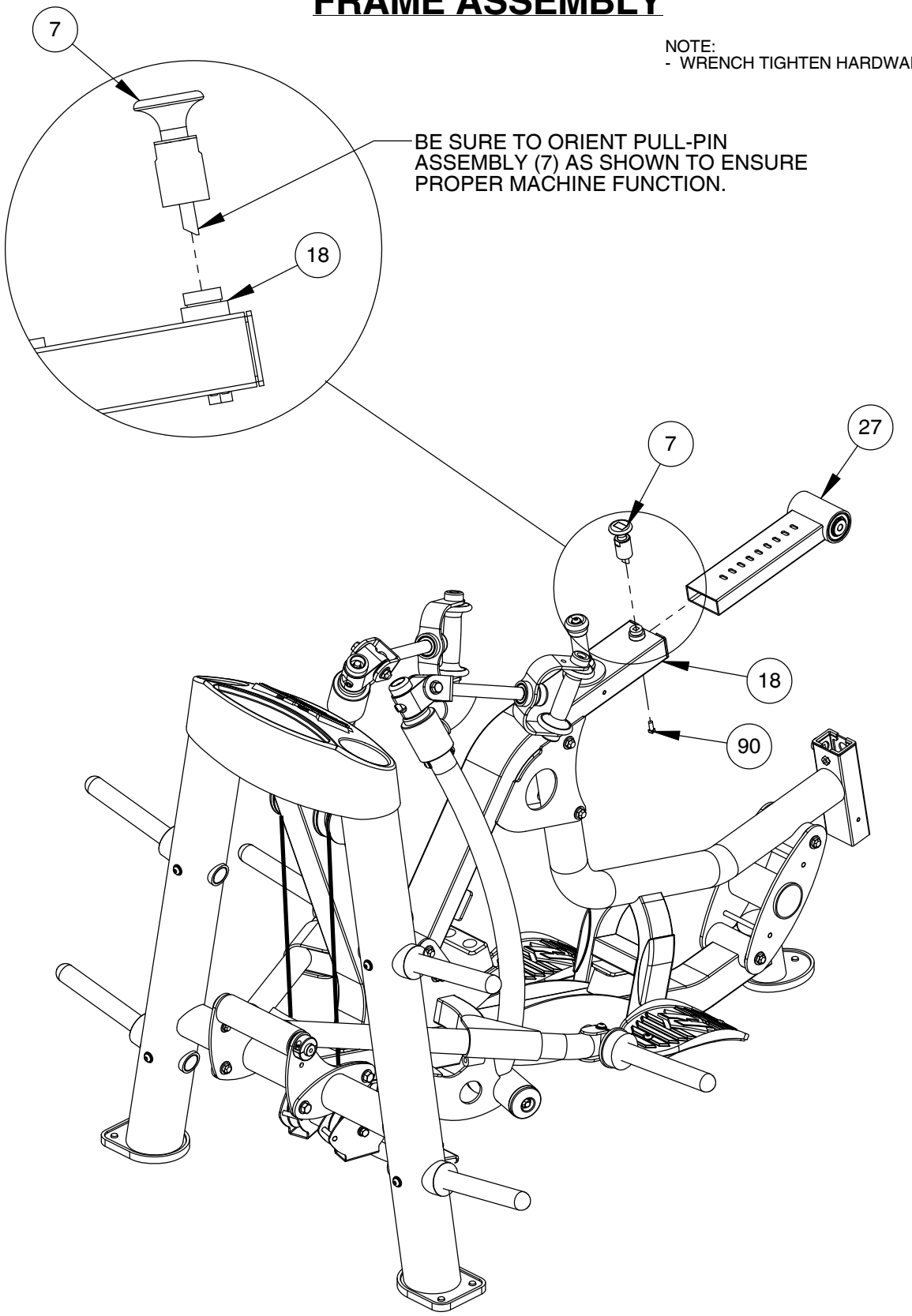

FRAME ASSEMBLY

NOTE:
- WRENCH TIGHTEN HARDWARE.

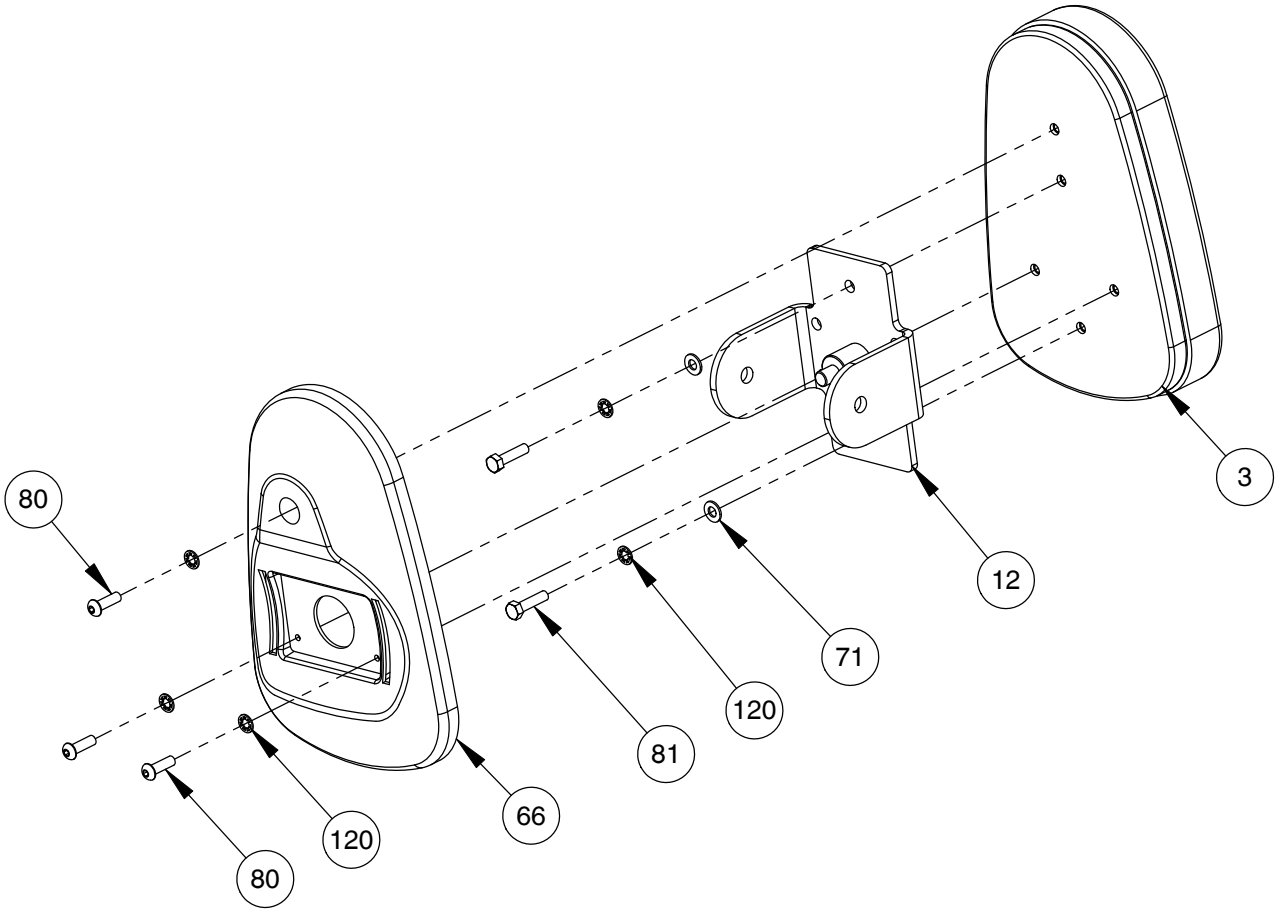

FRAME ASSEMBLY

NOTE:
- WRENCH TIGHTEN HARDWARE.

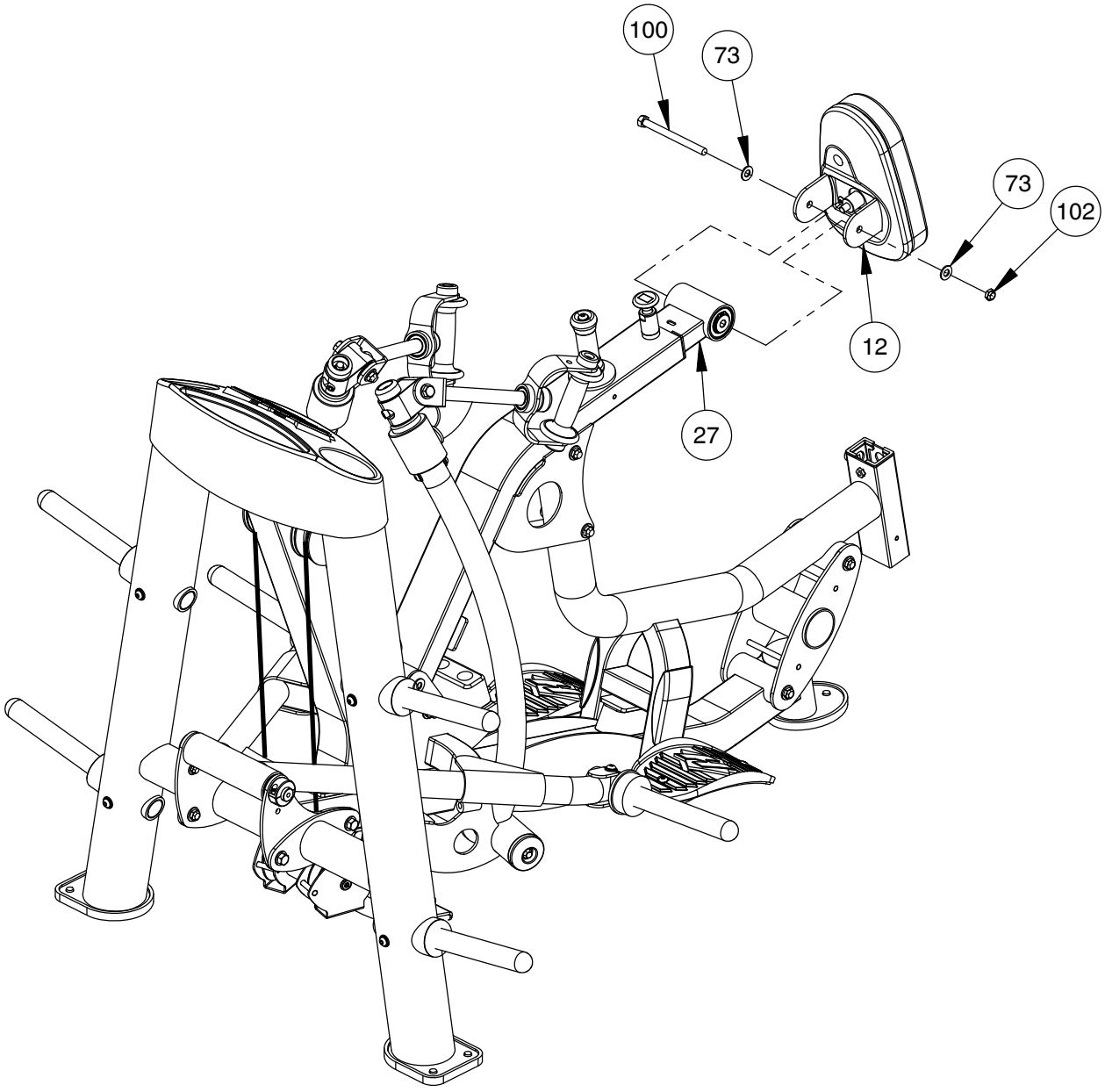

FRAME ASSEMBLY

NOTE:
- WRENCH TIGHTEN HARDWARE.

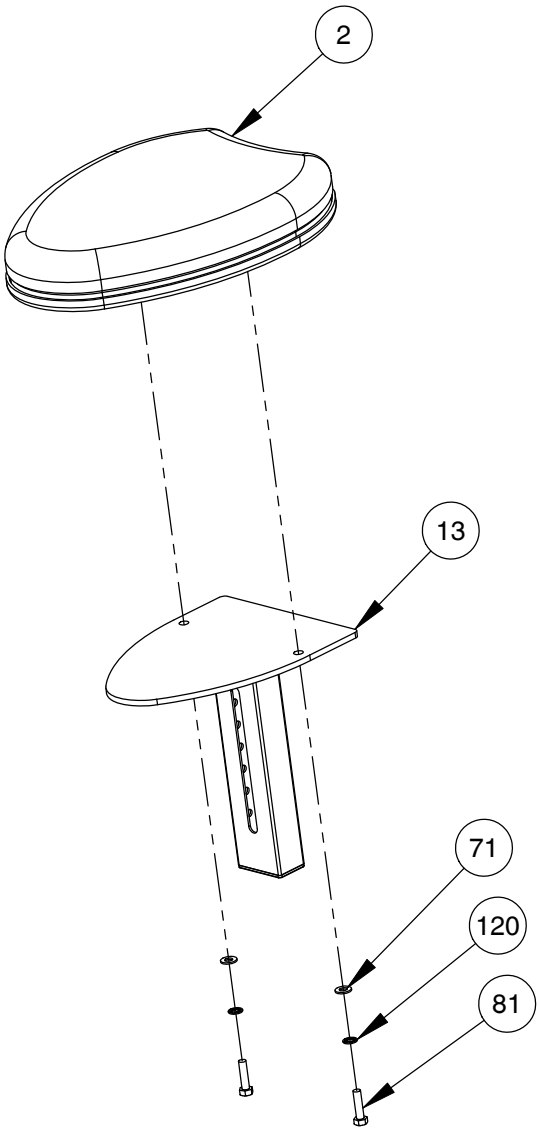

FRAME ASSEMBLY

NOTE:
- WRENCH TIGHTEN HARDWARE.

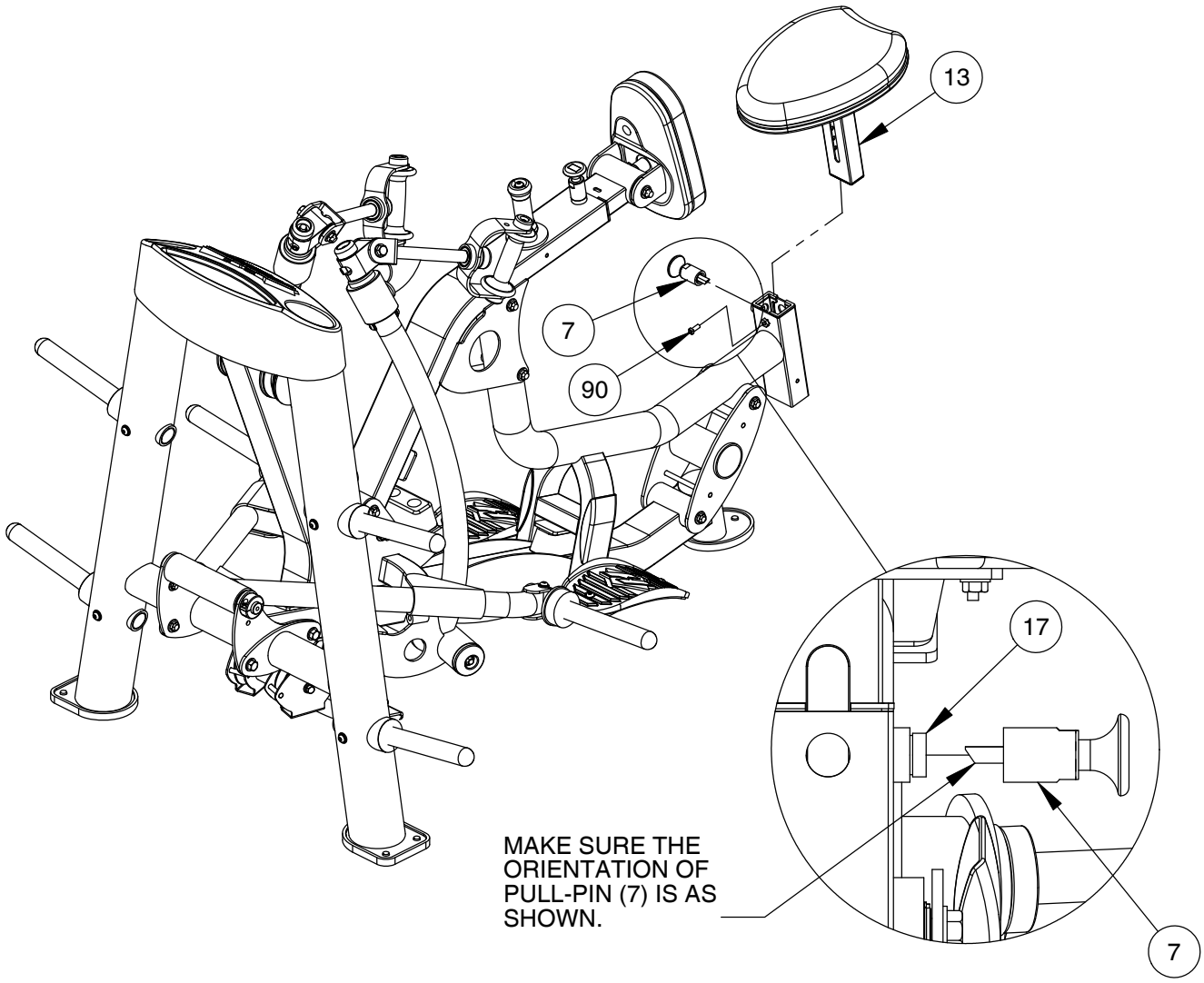

IMPORTANT

NOW THAT THE RPL-5203-A IS COMPLETELY ASSEMBLED TAKE TIME TO ASSURE THAT YOUR UNIT IS ASSEMBLED SQUARE AND PERPENDICULAR.
IF THEY, IT WILL BE NECESSARY TO LOOSEN SOME FRAME HARDWARE TO RE-ALIGN THE FRAME AND RETIGHTEN BOLTS.

MACHINE ADJUSTMENT

MAJOR ADJUSTMENT:

NOTE:
- SOME PARTS MAY HAVE BEEN REMOVED FOR CLARITY.

LOOSEN JAM NUTS (29, JAM NUT) AND TWIST ADJUSTABLE STOPS (16) IN/OUT TO ADJUST THE PRESS ARMS TO THE PROPER HEIGHT. ONCE THE PROPER HEIGHT IS REACHED AND THE PRESS ARMS ARE OF EQUAL HEIGHTS, RE-TIGHTEN JAM NUTS (29). THEN TIGHTEN CABLE ANCHOR BOLTS ON CABLE (1) TO REMOVE SLACK FROM CABLE. THEN RETIGHTEN JAM NUT.

BE SURE DUAL HOLE BUMPERS (67) ARE IN CONTACT WITH FRAME STOPS (17, 23) WHEN MACHINE IS AT REST, AS SHOWN IN DETAIL VIEWS.

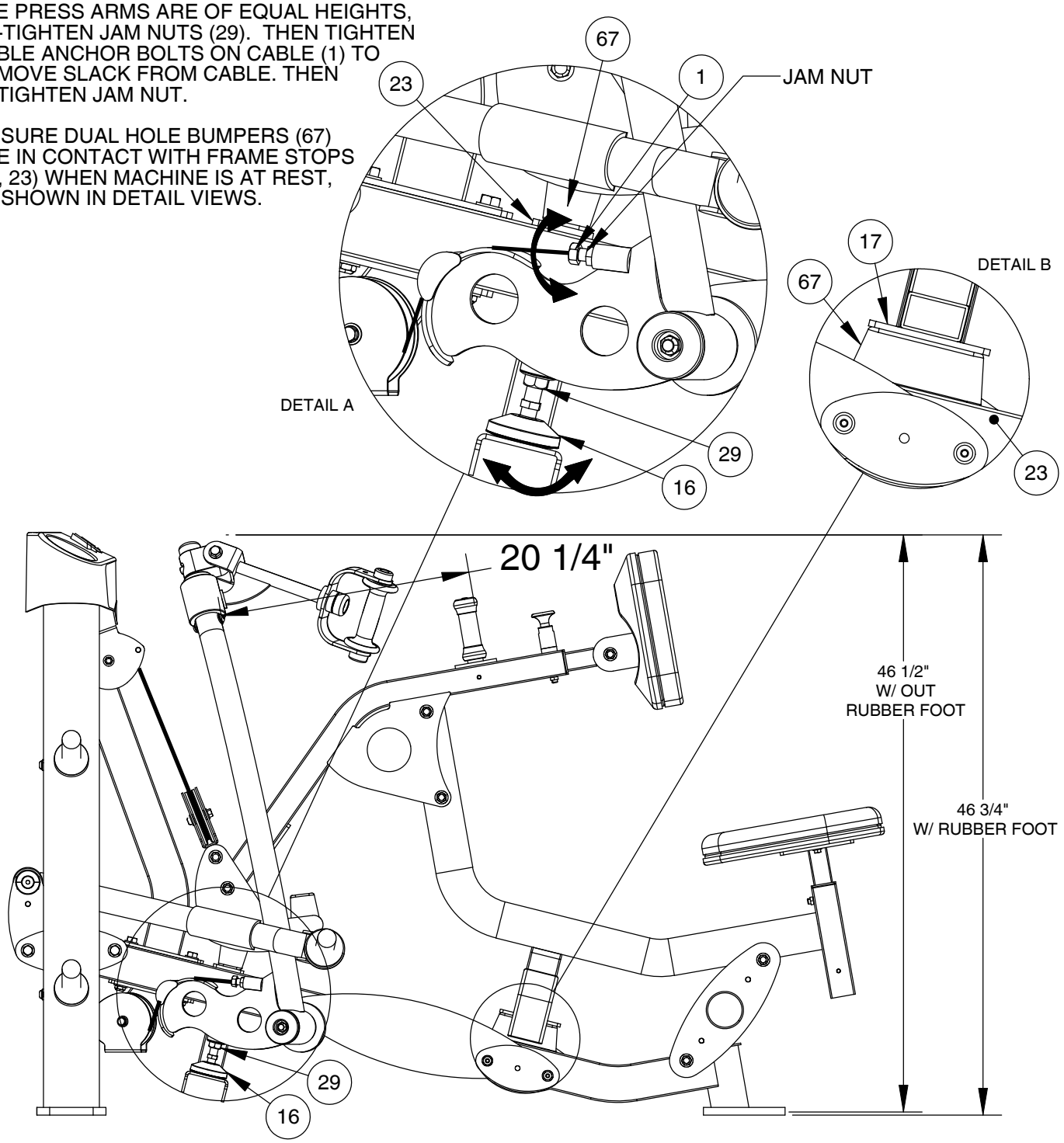

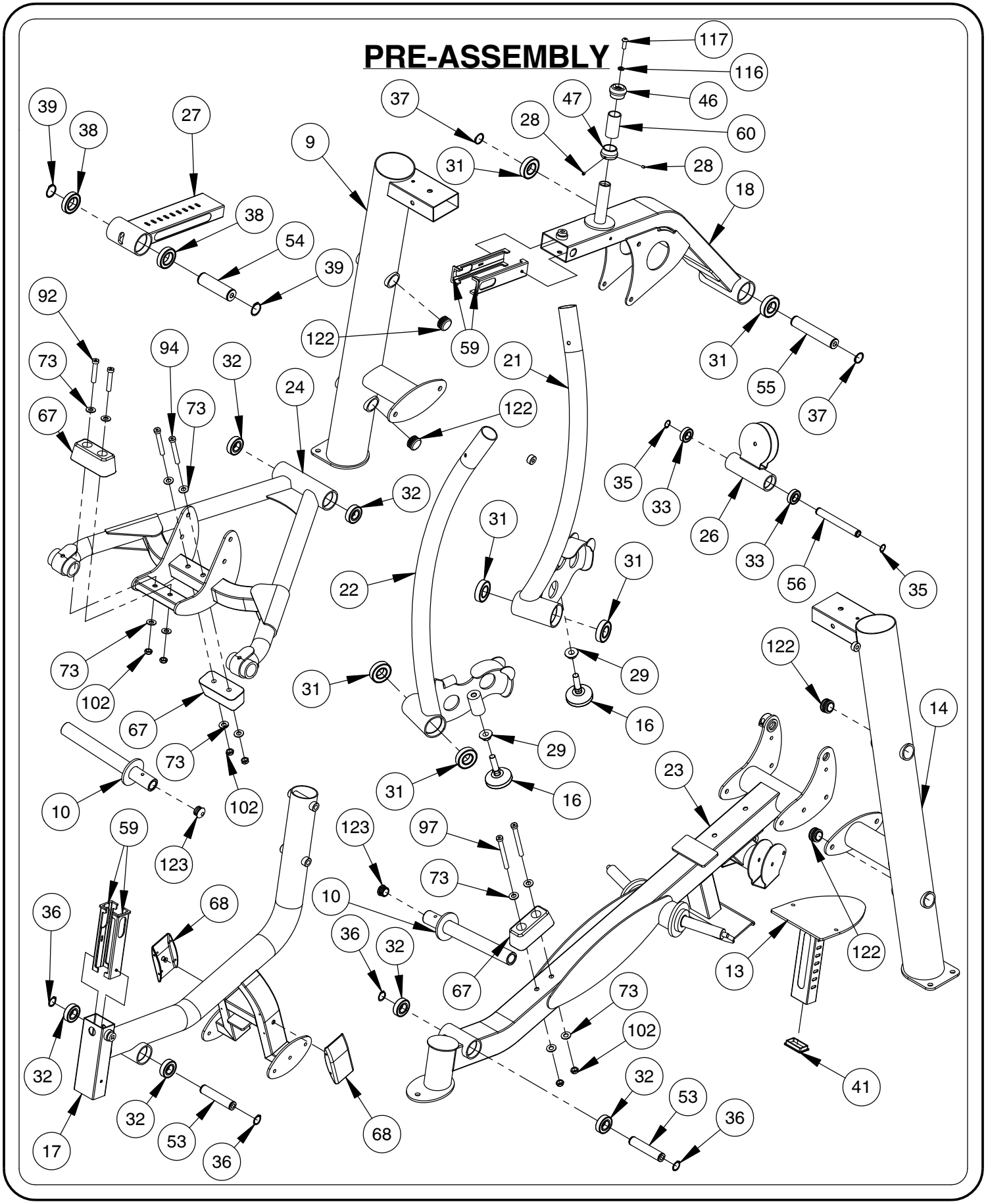
PRE-ASSEMBLY
117
116
46
60
47
28
28
37
31
9
27
38
39
38
54
39
18
92
73
67
94
73
32
24
122
59
21
122
31
55
37
35
33
26
33
56
35
32
31
31
22
29
16
122
14
73
102
67
73
102
31
29
16
31
23
10
123
59
123
97
73
10
36
68
36
32
67
13
122
73
102
32
32
53
36
41
17
32
53
36
68

PRE-ASSEMBLY

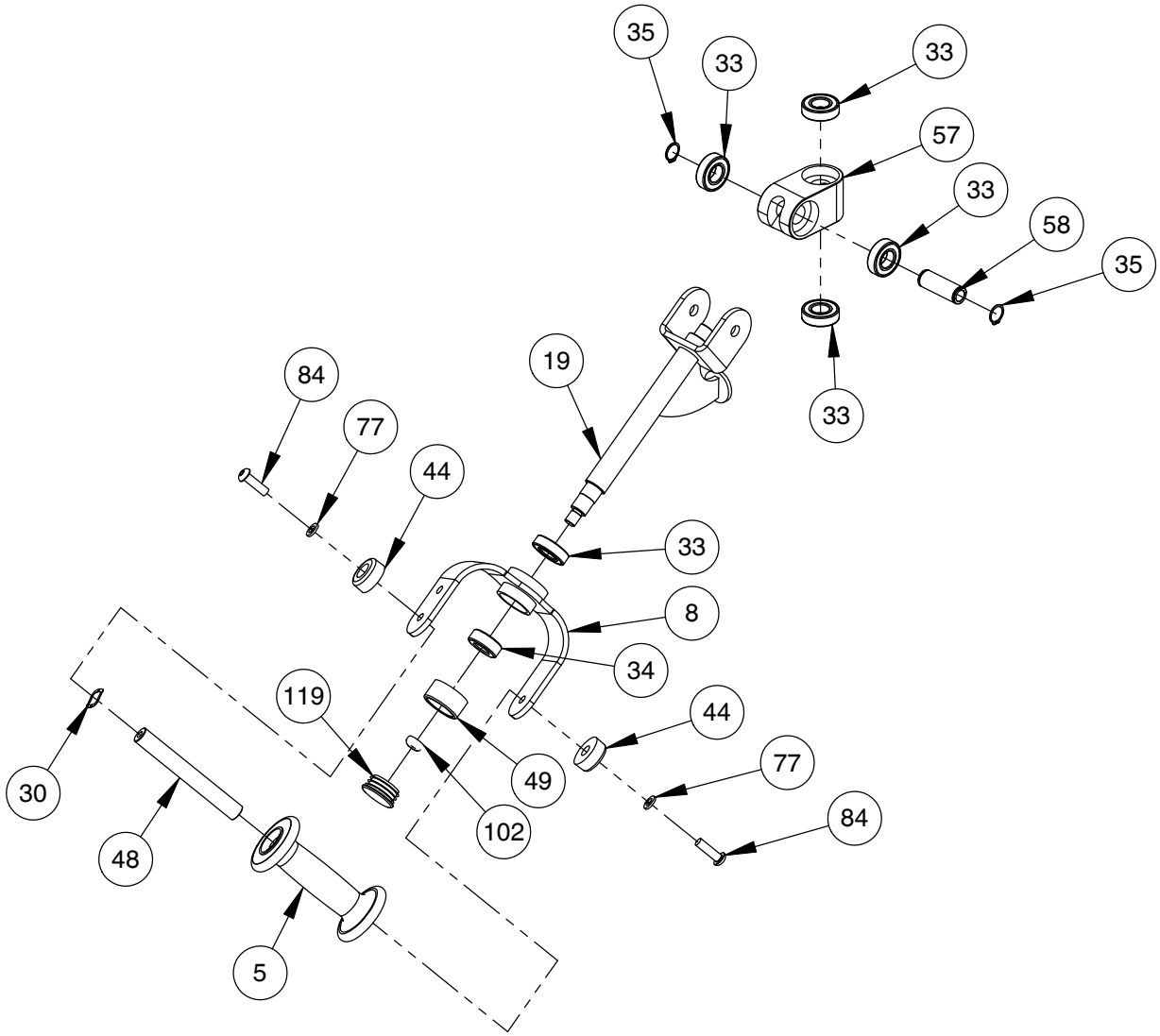

THIS PAGE WAS INTENTIONALLY LEFT BLANK

DECAL PLACEMENT

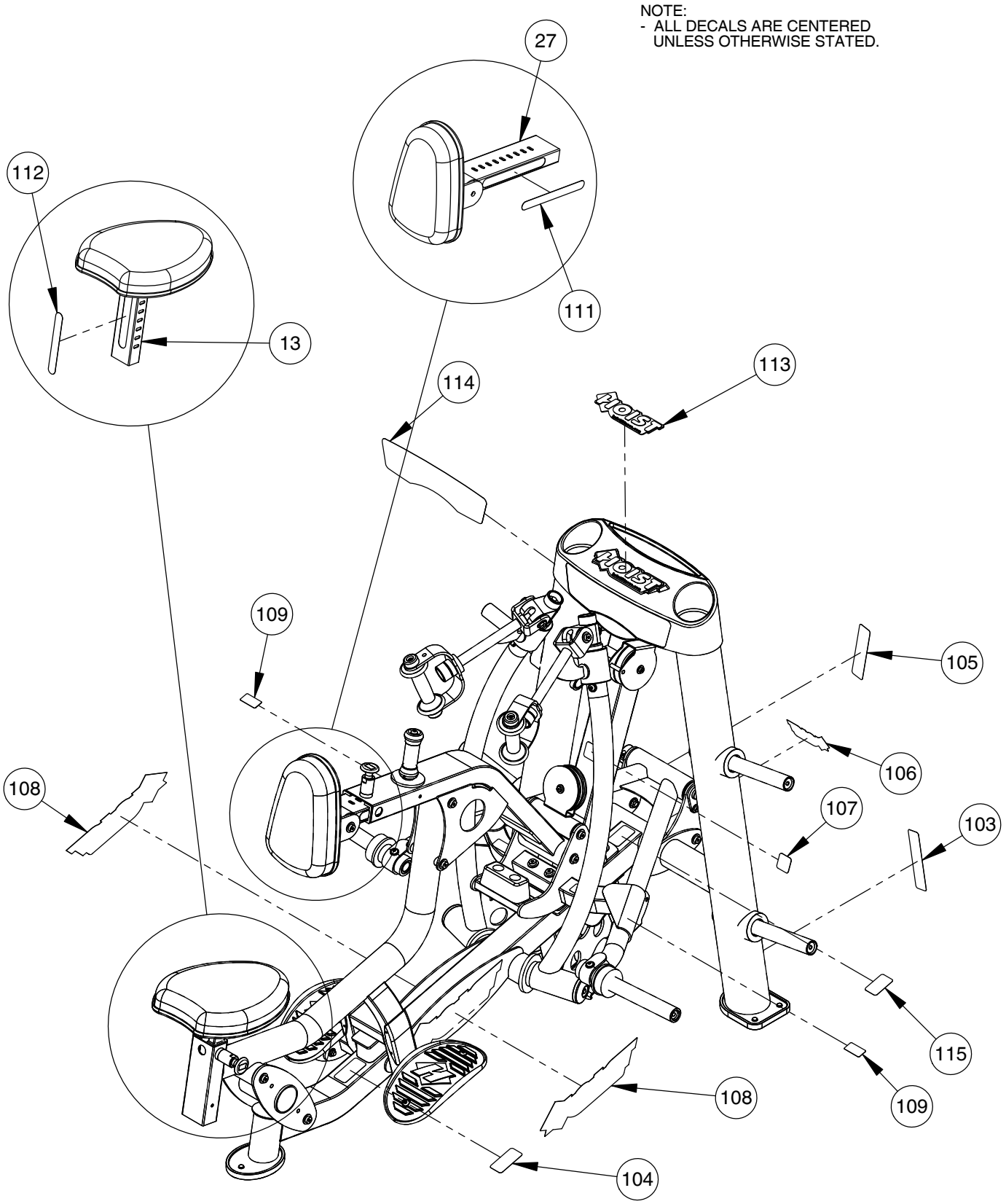

DECAL REFERENCE

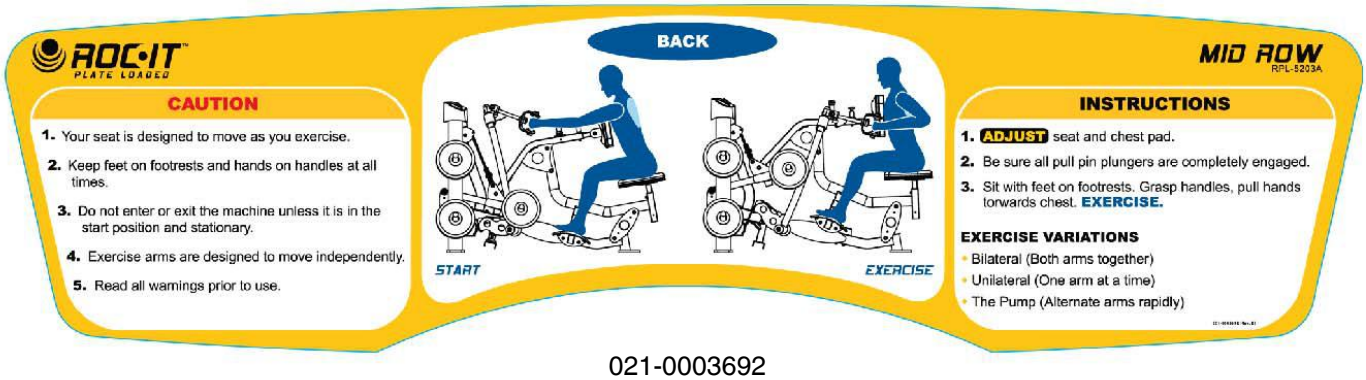

021-0003692

SERIAL # DECAL

021-0003320

021-0003341

021-0003730

021-0004032

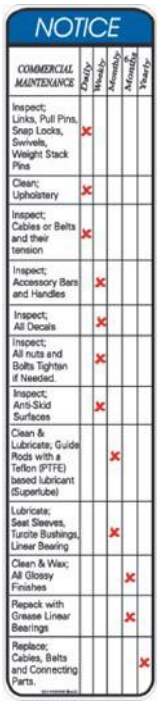

021-0003008

021-0003135

021-0003230

021-0003334

021-0003113

PART LIST

NOTE: SOME OF THESE PARTS MAY COME PRE-INSTALLED

ITEM NO.	PART NUMBER	DESCRIPTION	QTY.
1	010-01C0408	CABLE ASSEMBLY: RPL-5203-A 136" LG.	1
2	022-01PD2054-A	SEAT PAD ASSEMBLY	1
3	022-01PD2143-A	CHEST PAD ASSEMBLY	1
4	026-01PL2124	FOOTPLATE, MOLDED	2
5	026-01X2588	HAND GRIP	2
6	026-01X2975	FOOT PLATE MOUNT ASSEMBLY	2
7	026-01X3160	RATCHET PULL-PIN ASSEMBLY	2
8	026-01X3238	HANDLE ASSEMBLY	2
9	026-01X3294	REAR UPRIGHT LEFT ASSEMBLY	1
10	026-01X6626	RPL LIFT WEIGHT HORN	2
11	026-01X3321	FLOATING LINK	1
12	026-01X3347	UPHOLSTERY MOUNTING BRACKET	1
13	026-01X3356	SEAT ADJUSTER ASSEMBLY	1
14	026-01X3377	REAR UPRIGHT RIGHT ASSEMBLY	1
15	026-01X3536	SHAFT, ROCKING LINK	1
16	026-01X5186	LEVELING FOOT (M16X2.0)	2
17	026-01X5436	USER SUPPORT FRAME	1
18	026-01X5440	UPPER USER SUPPORT FRAME	1
19	026-01X5441	HANDLE PIVOT BASE	2
20	026-01X5442	KNUCKLE MOUNT	2
21	026-01X5445	PULL-ARM, RIGHT	1
22	026-01X5446	PULL-ARM LEFT	1
23	026-01X5447	SEAT ASSEMBLY	1
24	026-01X5448	LIFT ARM	1
25	026-01X5449	CENTER UPRIGHT	1
26	026-01X5450	SWIVEL PULLEY	1
27	026-01X5460	CHEST PAD ADJUSTER	1
28	011-0411001	SET SCREW: 1/4"-28 X .25" LG. (SS)	2
29	012-0103001	16M X 2.0 FLANGED NUT (WZ)	2
30	013-0903008	.76" I.D. WAVE WASHER	4
31	014-0012013	BEARING: BALL BEARING Ø2.44" O.D. X Ø1.18" I.D.	6
32	014-0012014	BEARING: FLANGELESS - 25mm I.D.	6
33	014-0012015	BEARING: FLANGELESS ∅1.65" O.D. X ∅.79" I.D. X .47" WIDE	12
34	014-0012016	THRUST BEARING - .75" I.D.	2
35	014-0012017	SNAP RING - 20mm EXTERNAL	6
36	014-0012018	SNAP RING - 25mm EXTERNAL	4
37	014-0012019	SNAP RING - 30mm EXTERNAL	2
38	014-0012020	BEARING - FLANGELESS BALL 2.44" O.D. X 35MM I.D. X .55"	2
39	014-0015023	EXTERNAL SNAP RING 1.38" DIA.	2
40	014-0019005-1	T SPLIT COLLAR THREADED ∅1.00" I.D. X 20mm	1

PART LIST CONTINUED

NOTE: SOME OF THESE PARTS MAY COME PRE-INSTALLED

ITEM NO.	PART NUMBER	DESCRIPTION	QTY.
41	016-0001003	END CAP 1.50" X 2.50" (BLACK)	1
42	018-0002014	CABLE PULLEY: WIDE (BORED HUB) Ø4.50"	4
43	018-0001003	CABLE PULLEY: Ø4.50"	1
44	019-0001003	BUMPER (BLACK) Ø1.50" O.D. X Ø.75" I.D. X .63" LG.	4
45	026-01F0251	BRACKET PLATE: 2 HOLES 7.00" X 2.75"	1
46	026-01M0932	ALUMINIUM CAP: Ø1.25" ID	1
47	026-01M0933	ALUMINUM RING: Ø1.25" ID	1
48	026-01M1041	SHAFT: ∅.75" O.D. X 5.85" LG.	2
49	026-01M1176	HANDLE END CAPS	4
50	026-01X6625	RPL STORAGE WEIGHT HORN	4
51	026-01M2043	BOLT STAND-OFF	2
52	026-01M2356	END CAP: DOMED Ø 2.75" O.D.	2
53	026-01M2360	SHAFT - ∅25mm X 4.71" LG.	2
54	026-01M2726	SHAFT: ∅35MM O.D. X Ø.5156" I.D. X 4.71" LG.	1
55	026-01M2729	SHAFT - ∅1.181 X 6.3370 LG.	1
56	026-01M2732	∅.787" [20mm] SHAFT, 6.3370" LG.	1
57	026-01M2733	PIVOT KNUCKLE	2
58	026-01M2735	SHAFT, .787" OD X .5156" ID X 2.2610" LG.	2
59	026-01PL0125	E-Z GLIDE PLASTIC SLEEVE	4
60	026-01PL0235-35	∅1.188" X 2.6900" OPEN END GRIP	1
61	026-01PL0264	WEIGHT HORN RUBBER DONUT	2
62	026-01PL0292	SLEEVE BUMPER	2
63	026-01PL2122	OVAL-SHAPED RUBBER FOOT	1
64	026-01PL2131	D-SHAPED RUBBER FOOT	2
65	026-01PL2236	TOP CAP W/INSERTS	1
66	026-01PL2241	UPHOLSTRY BACKING	1
67	026-01PL2246	DUAL HOLE BUMPER 2.05" THICK	3
68	026-01PL2522	PLASTIC SCUFF GUARD 5.60" ANGLED WITH RIVETS	2
69	026-01PL2533	RUBBER DONUT FOR PLASTIC WEIGHT HORN	4
70	013-1002008	1/4" X 16mm SAE FLAT WASHER (Ni)	2
71	013-1002010	5/16" SAE FLAT WASHER (Ni)	4
72	013-1002007	3/8" X 22mm FLAT WASHER (Ni)	42
73	013-1002006	1/2" X 27mm SAE FLAT WASHER (Ni)	50
74	013-1006001	1/4" SPLIT LOCK WASHER (Ni)	2
77	013-1006003	3/8" SPLIT LOCK WASHER (Ni)	20
78	011-0007097	1/4"-20UNC X .75" SHCS (BZ)	2
79	011-0701083	1/4"-20UNC X 2.50" BHCS (Ni) w/ NYLON PATCH	2
80	011-0701003	5/16"-18UNC X 1.00" BHCS (Ni)	3
81	011-0701004	5/16"-18UNC X 1.25" BHCS (Ni)	4
82	011-0701086	3/8"-16UNC X 1.00" SHCS (Ni)	2

PART LIST CONTINUED

NOTE: SOME OF THESE PARTS MAY COME PRE-INSTALLED

ITEM NO.	PART NUMBER	DESCRIPTION	QTY.
83	011-0701020	3/8"-16UNC X 1.00" BHCS (Ni)	12
84	011-0701021	3/8"-16UNC X 1.25" BHCS (Ni)	4
85	011-0701027	3/8"-16UNC X 2.75" BHCS (Ni)	4
86	011-0116142	3/8"-16UNC X 1.00" LOW HEAD SHCS (Ni)	1
87	011-0116167	3/8"-16UNC X 7.25" LOW HEAD SHCS (Ni)	1
88	011-0116145	3/8"-16UNC X 1.75" LOW HEAD SHCS (Ni)	1
89	011-0116147	3/8"-16UNC X 2.25" LOW HEAD SHCS (Ni)	2
90	011-0704001	3/8-16UNC X .75" SQUARE HEAD (Ni)	2
91	011-0116107	1/2"-13UNC X 1.00" LOW HEAD SHCS (Ni)	4
92	011-0116113	1/2"-13UNC X 2.50" LOW HEAD SHCS (Ni)	2
93	011-0116115	1/2"-13UNC X 3.00" LOW HEAD SHCS (Ni)	2
94	011-0116117	1/2"-13UNC X 3.50" LOW HEAD SHCS (Ni)	4
95	011-0116133	1/2"-13UNC X 7.50" LOW HEAD SHCS (Ni)	2
96	011-0116119	1/2"-13UNC X 4.00" LOW HEAD SHCS (Ni)	2
97	011-0116121	1/2"-13UNC X 4.50" LOW HEAD SHCS (Ni)	2
98	011-0116123	1/2"-13UNC X 5.00" LOW HEAD SHCS (Ni)	4
99	011-0116126	1/2"-13UNC X 5.75" LOW HEAD SHCS (Ni)	2
100	011-0116127	1/2"-13UNC X 6.00" LOW HEAD SHCS (Ni)	1
101	012-0504005	3/8"-16 UNC THIN NYLOCK NUT (Ni)	13
102	012-0504002	1/2"-13 UNC THIN NYLOCK NUT (Ni)	31
103	021-0003008	DECAL COMMERCIAL MAINTENANCE 1.50" X 6.69"	1
104	021-0003113	DECAL PINCH POINT 1.63" X 3.25" (VERTICAL)	1
105	021-0003135	DECAL WARNING 1.50" X 6.69"	1
106	021-0003230	DECAL HOIST 1.625" X 6.0613"	1
107	021-0003320	DECAL 800 LB. WEIGHT RATING (1.63" X 1.63")	1
108	021-0003334	DECAL HOIST 3.88" X 14.45"	2
109	021-0003341	DECAL PINCH POINT 1.07" X 2.13" (HORIZONTAL)	2
111	021-0003730	DECAL ADJUST 1-9 (HORIZONTAL)	1
112	021-0004032	DECAL ADJUST 1-7 VERTICAL TXT.	1
113	021-0018022	DECAL HOISTFITNESS.COM LOGO	1
114	021-0003692	RPL-5203 SEATED MID-ROW PLACARD	1
115	SERIAL # DECAL	DECAL HOIST SERIAL # 1.63" X 2.63"	1
116	013-0402011	3/8" SPLIT LOCK WASHER (SS)	1
117	011-0401005	3/8"-16UNC X 1.00" BHCS (SS)	1
118	011-0701028	3/8"-16UNC X 3.00" BHCS (Ni)	2
119	016-0201051	∅1 5/8" END CAP (DOMED)	4
120	013-1010003	5/16" INTERNAL LOCK WASHER (Ni)	7

PART LIST CONTINUED

NOTE: SOME OF THESE PARTS MAY COME PRE-INSTALLED

ITEM NO.	PART NUMBER	DESCRIPTION	QTY.
121	013-1006008	M12 SPLIT LOCK WASHER (Ni)	2
122	016-0201023	END CAP ∅1.50" (BLACK)	4
123	026-01PL0286	∅1.25" END PLUG	2
124	026-01PL2532	LONG WEIGHT HORN COVER	4
125	026-01PL2535	WEIGHT HORN END CAP	6
126	026-01PL2576	9.25" WEIGHT HORN COVER	2
127	011-0701084	3/8"-16UNC X 1.25" BHCS (Ni) W/ DRI-LOC PATCH	6

THIS PAGE WAS INTENTIONALLY LEFT BLANK

ABBREVIATIONS

BZ = Black Zinc
Ni = Nickel Plated
SS = Stainless Steel
WZ = White Zinc

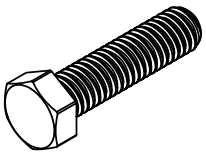

HHB = Hex Head Bolt

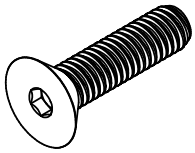

FHCS = Flat Head Cap Screw

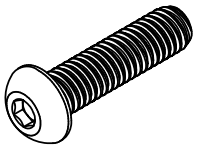

BHCS = Button Head Cap Screw

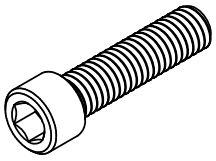

SHCS = Socket Head Cap Screw

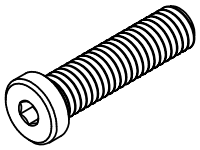

Low Head SHCS = Low Head Socket Head Cap Screw

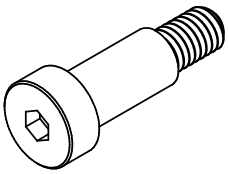

SHSS = Socket Head Shoulder Screw

BOLT SIZING CHART

1/4" HHB
RECOMMENDED TORQUE RANGE: 6-8 ft-lbs

5/16" HHB
RECOMMENDED TORQUE RANGE: 14-17 ft-lbs

3/8" HHB
RECOMMENDED TORQUE RANGE: 24-30 ft-lbs

1/2" HHB
RECOMMENDED TORQUE RANGE: 60-75 ft-lbs

1/4" BHCS
RECOMMENDED TORQUE RANGE: 5-7 ft-lbs

5/16" BHCS
RECOMMENDED TORQUE RANGE: 11-15 ft-lbs

3/8" BHCS
RECOMMENDED TORQUE RANGE: 19-26 ft-lbs

1/2" BHCS
RECOMMENDED TORQUE RANGE: 47-65 ft-lbs

1/4" LOW HEAD SHCS
RECOMMENDED TORQUE RANGE: 4-6 ft-lbs

5/16" LOW HEAD SHCS
RECOMMENDED TORQUE RANGE: 9-12 ft-lbs

3/8" LOW HEAD SHCS
RECOMMENDED TORQUE RANGE: 18-23 ft-lbs

1/2" LOW HEAD SHCS
RECOMMENDED TORQUE RANGE: 40-50 ft-lbs

1/4" SHCS
RECOMMENDED TORQUE RANGE: 11-14 ft-lbs

5/16" SHCS
RECOMMENDED TORQUE RANGE: 23-29 ft-lbs

3/8" SHCS
RECOMMENDED TORQUE RANGE: 39-49 ft-lbs

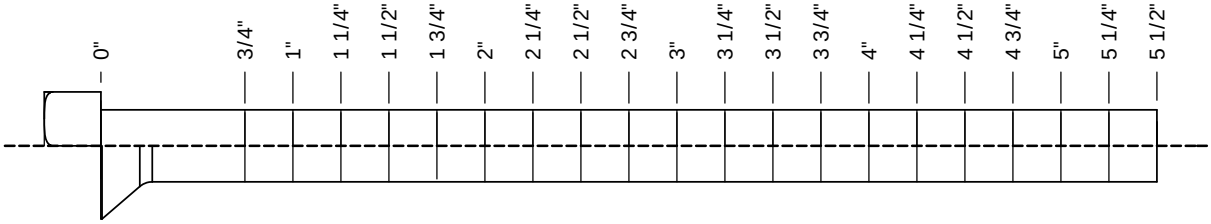

1/4" FHCS
RECOMMENDED TORQUE RANGE: 5-7 ft-lbs

3/8" FHCS
RECOMMENDED TORQUE RANGE: 19-26 ft-lbs

1/2" FHCS
RECOMMENDED TORQUE RANGE: 47-65 ft-lbs

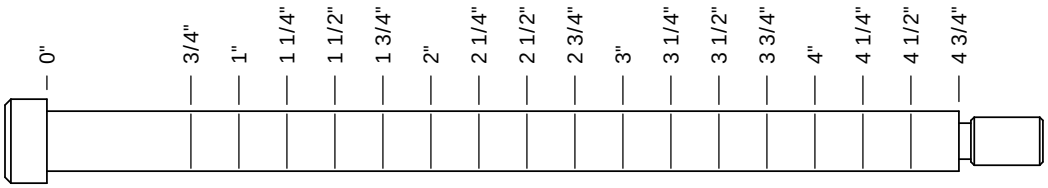

1/4" SHSS
RECOMMENDED TORQUE RANGE: 3-4 ft-lbs

5/16" SHSS
RECOMMENDED TORQUE RANGE: 8-10 ft-lbs

3/8" SHSS
RECOMMENDED TORQUE RANGE: 17-22 ft-lbs

WASHER SIZING CHART

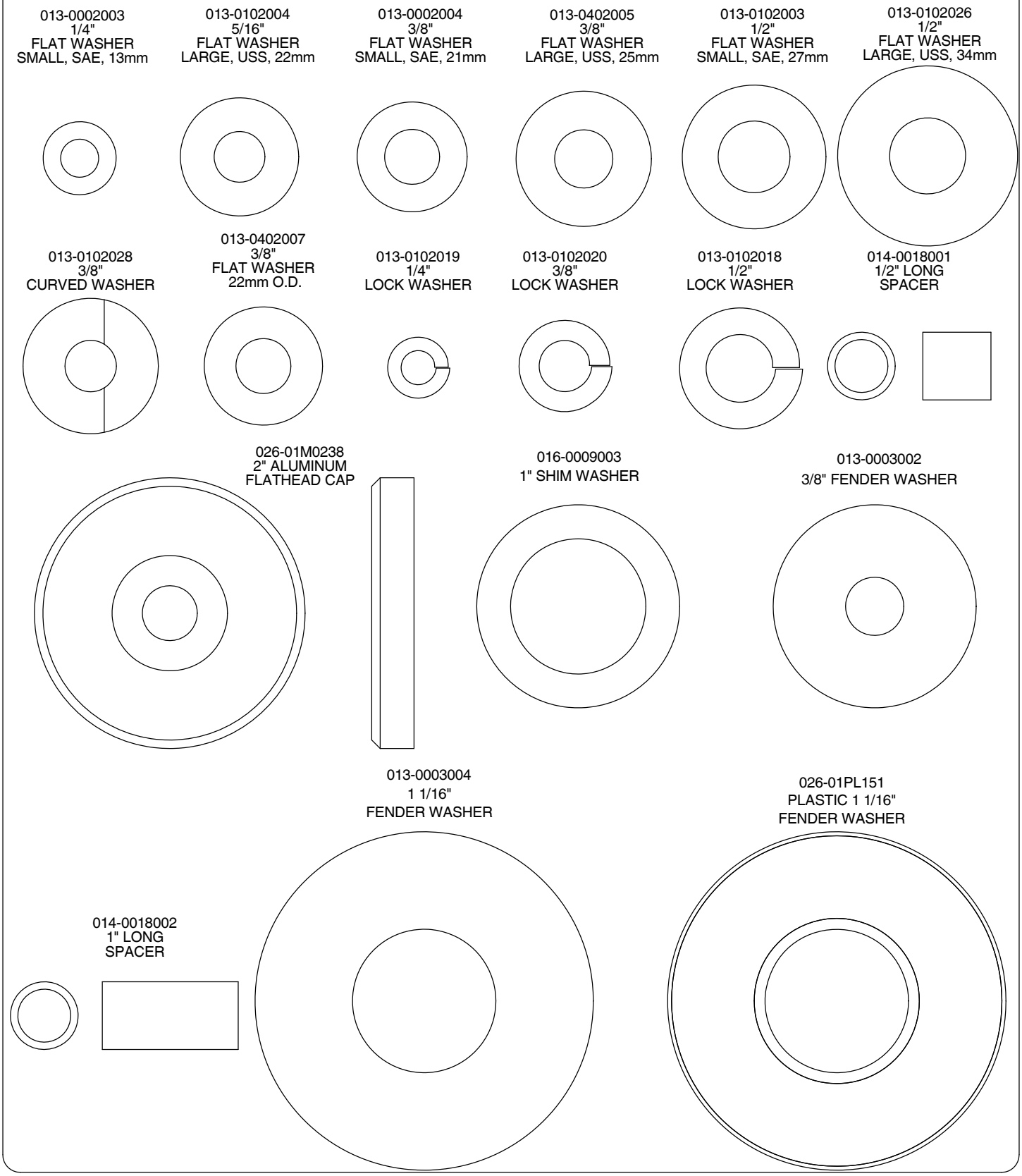

WASHER SIZING CHART
(CONTINUED)

026-01M0211
1/4" LONG
FLANGED SPACER

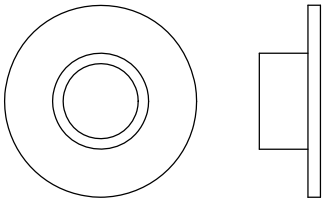

026-01M0198
1/2" LONG
FLANGED SPACER

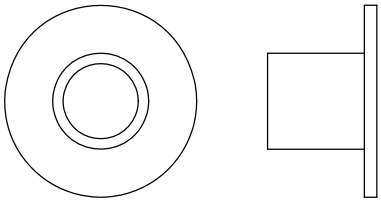

026-01M0760
1/2" LONG HEAVY
FLANGED SPACER

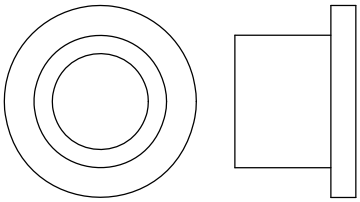

026-01M211T
1/4" LONG HEAVY
FLANGED SPACER

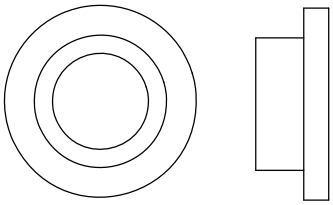

026-01M0532
11/16" LONG HEAVY
FLANGED SPACER

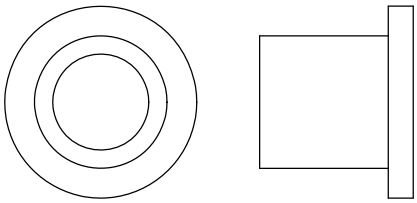

026-01M0551
1" LONG HEAVY
FLANGED SPACER

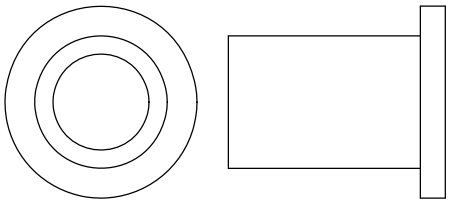

026-01M0788
.81" LONG HEAVY
FLANGED SPACER

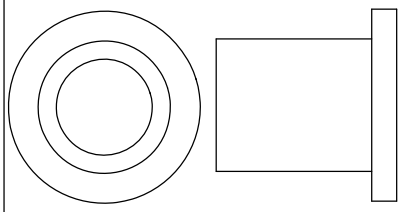

026-01M0780
.65" LONG HEAVY
FLANGED SPACER

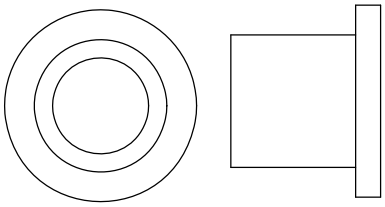

026-01M0761
1 11/16" LONG HEAVY
FLANGED SPACER

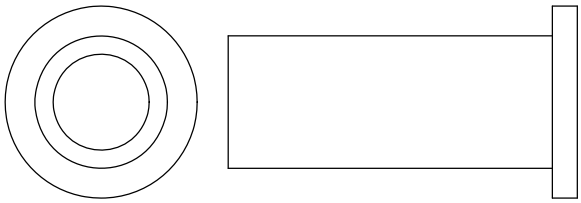

026-01M0789
.44" LONG HEAVY
FLANGED SPACER

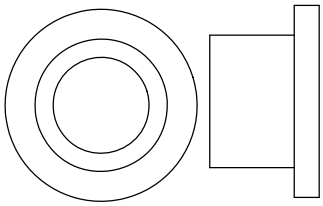

026-01M0762
1 1/2" LONG HEAVY
FLANGED SPACER

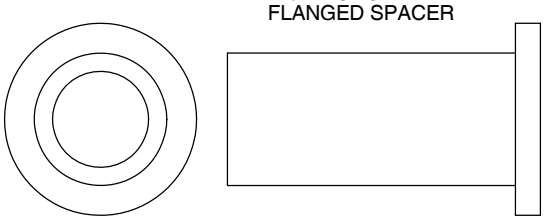

026-01M0768
1 1/4" LONG HEAVY
FLANGED SPACER

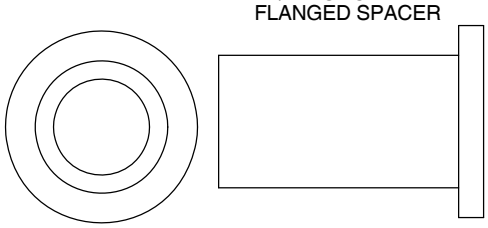

026-01M0600
.625" LONG
FLANGED SPACER

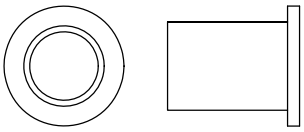

026-01M0240
1 3/8" ALUMINUM
FLATHEAD CAP

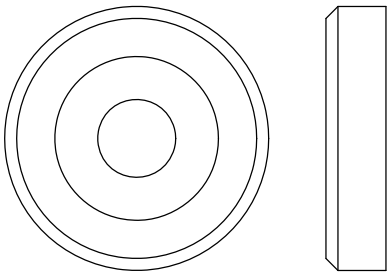

026-01M0239
1 5/8" ALUMINUM
FLATHEAD CAP

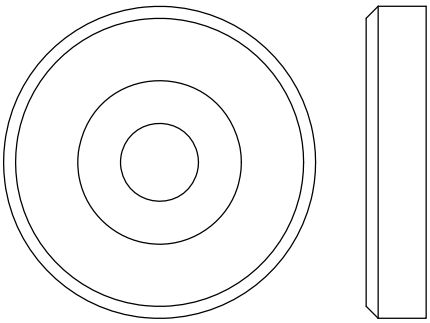

MAINTENANCE SCHEDULE

ROUTINE	COMMERCIAL / LIGHT COMMERCIAL MAINTENANCE	HOME MAINTENANCE	LATEST DATE ENTRY								
Inspect; Links, Pull Pins, Snap Locks, Swivels, Weight Stack Pins	DAILY	WEEKLY									
Clean; Upholstery	DAILY	WEEKLY									
Inspect; Cables or Belts and their tension	DAILY	WEEKLY									
Inspect; Accessory Bars, and Handles	WEEKLY	3 MONTHS									
Inspect; All Decals	WEEKLY	3 MONTHS									
Inspect; All Nuts and Bolts, Tighten if needed	WEEKLY	3 MONTHS									
Inspect; Anti-Skid Surface	WEEKLY	3 MONTHS									
Clean & Lubricate; Guide Rods with a Teflon (PTFE) based lubricant (Superlube)	MONTHLY	3 MONTHS									
Lubricate; Seat Sleeves, Turcite Bushings, Linear Bearing	MONTHLY	3 MONTHS									
Clean and Wax; All Glossy Finishes	6 MONTHS	YEARLY									
Repack with Grease; Linear Bearings	6 MONTHS	YEARLY									
Replace; Cables, Belts and Connecting Parts	YEARLY	3 YEARS									

Your equipment comes with a commercial maintenance decal.
For personal, in home use, please follow the home maintenance schedule listed above.

Never use ammonia, acid-based, or petroleum-based solvents on any portion of the machine as it may damage the finish.

HOIST FITNESS SYSTEMS
GENERAL MAINTENANCE INFORMATION

Links, Pull-Pins, Snap Hooks, Swivels, Weight Stack Pins:

*Check all pieces for signs of visible wear or damage.

*Check springs in snap hooks and pull-pins for proper tension and alignment.

*If the spring sticks or has lost its rigidity, replace it immediately.

Upholstery:

*To ensure prolonged upholstery life and proper hygiene, all upholstered pads should be wiped down with a damp cloth after every workout.

*Periodically take the time to use a mild soap or an approved vinyl upholstery cleaner to deter the onset of cracking or drying. Avoid using any abrasive cleaners or cleaners not intended for use on vinyl.

*Replace ripped or warn upholstery immediately.

*Keep sharp or pointed objects clear of all upholstery.

Decals:

*Inspect and familiarize yourself with any safety warnings or other user information posted on each decal.

Nuts and Bolts:

*Inspect all nuts and bolts for any loosening and tighten if needed.

*Go through a re-tightening sequence periodically to ensure that all hardware is tensioned proper.

Anti-Skid Surfaces:

*These surfaces are designed to supply secure footing and need to be replaced if they appear worn or become slippery.

Belts and Cables:

*Hoist uses only high quality belt, and mil-spec cables.

*Visually inspect the belts and cables for fraying, cracking, peeling or discoloration.

*While the machine is not in use, carefully run your fingers along the belt or cable to feel for thinning or bulging areas.

*Replace belts and cables immediately at the first signs of damage or wear. Do not use equipment until belts or cables have been replaced.

Belt and Cable Tension:

*Referring to the Owners Manual, when belts or cables are used check all bolts attachments to be sure they are properly attached.

*Check slack in cables and re-adjust cable tension if needed.

Seat Sleeves, Guide Rods:

*Wipe down adjusting tubes with a dust free rag before applying lubricant.

*Lubricate seat sleeves and Guide Rods with a Silicon or Teflon based lubricant spray.

Linear Bearings:

*Referring to the Owners Manual carefully disassemble the bearing from its housing and place a finger full of light grease (lithium, super lube, etc.) into the inside of the bearing. Using your finger, press the grease into the ball-bearings and their tracks. repeat until the ball-bearing tracks are full of grease. Insert the shaft back into the bearing and wipe off excess grease.

PLEASE KEEP THIS FOR YOUR RECORDS

WEIGHT TRAINING TIPS

Use this manual to guide you through the basic exercises you can perform on your RPL-5203-A HOIST® Fitness System. To gain maximum results and avoid possible injury, consult a fitness professional to develop your complete exercise program.

Always consult your physician before starting any exercise program.

To be successful in your exercise program, it is important to develop an understanding of the basic principles of strength training. Now that you have your RPL-5203-A HOIST® Fitness System, it is only natural that you want to get started immediately. First, determine a set of realistic goals and objectives for yourself. By deciding on an exercise plan that is right for you prior to starting, you will contribute significantly to your success.

Warm up properly before engaging in weight resistance training. Stretching, yoga, jogging, calisthenics or other cardiovascular exercise can help prepare your body for the heavier workload of lifting weights.

Learn how to perform the exercise correctly before using heavy weight. Correct form is important to avoid injury and to ensure that you work the proper muscle groups.

Know your limitations. If you are new to weight training or are embarking on an exercise regimen after a long layoff, start slowly and build foundational strength over a longer period of time.

Pay attention to your breathing. Exhale when you exert is a general rule of thumb. Never hold your breath.

Enjoy your RPL-5203-A HOIST® Fitness System!

WEIGHT TRAINING EXERCISE LOG

S = Sets R = Repetition per set W = Weight used

Date																																										
Exercise	S	R	W	S	R	W	S	R	W	S	R	W	S	R	W	S	R	W	S	R	W	S	R	W	S	R	W	S	R	W	S	R	W	S	R	W	S	R	W	S	R	W
Totals																																										

HOIST FITNESS SYSTEMS
LIMITED LIFETIME WARRANTY

Hoist Fitness Systems warrants this product to the **original purchaser** to be free from defects in workmanship and/or materials under normal use or service. If at any time a component part is defective, Hoist Fitness Systems shall repair or replace it (at Hoist Fitness Systems option) within a reasonable period of time. This warranty does not cover costs of removal, transportation or reinstallation. This warranty shall not apply if the defect was caused by misuse, neglect or normal wear and tear.

WARRANTY CLAIMS. All claims require: Model number, Serial number, Date of installation, and any information supporting the existence of the alleged defect.

To complete Warranty Registration visit:
www.HOISTFITNESS.com
and click on the Warranty Registration link

Starting from the original date of purchase, normal wear and tear shall be considered as the following:

COMMERCIAL USE: All malfunctions of upholstery, grips, and coatings that occur up to one year; all malfunctions of belts, or cables up to one year; all malfunctions of pulleys, bearings, or bushings that occur up to three years. The frame and body components are warranted for ten years, with structural moving parts warranted for five years.

LIGHT COMMERCIAL USE: All malfunctions of upholstery, grips, and coatings that occur up to one year; all malfunctions of belts, or cables up to one year; all malfunctions of pulleys, bearings, or bushings that occur up to three years. The frame and body components are warranted for ten years, with structural moving parts warranted for five years.

HOME USE: All malfunctions of grips, paint, and chrome that occur up to ten years; all malfunctions of electronic components, belts, cables, or upholstery that occur up to ten years; all malfunctions of pulleys, bearings, or bushings that occur up to ten years. The frame and all welded components are warranted for the life of the product.

PLEASE NOTE THAT NOT ALL HOIST PRODUCTS ARE MADE FOR COMMERCIAL USE. Refer to the instructions page of your owners manual or consult with you fitness product dealer to establish if a product is made for commercial use or not. Using a non-commercial product in a commercial setting can result in serious injury or death! Hoist Fitness Systems sole responsibility shall be to repair or replace the component within the terms stated above. Hoist Fitness Systems shall not be liable for any loss or damage of any kind including any incidental or consequential damages resulting, directly or indirectly from any warranty expressed or implied or any other failure of this product.

LIGHT COMMERCIAL USE: Our Light Commercial warranty applies to facilities that **DO NOT** charge monthly membership dues and where the equipment would be used by **no more than 50** people per day. Examples of Light Commercial facilities include hotels, apartment complexes, personal training studios, fire stations, police stations, etc., that meet the criteria stated above.

WHAT IS NOT COVERED BY THIS WARRANTY: Hoist's sole obligation under this warranty is limited to either repair or replacement of parts, subject to the additions below. This warranty neither assumes nor authorizes any person to assume obligations other than expressly covered by this warranty.

NO CONSEQUENTIAL DAMAGES: Hoist is not responsible for economic loss; profit loss; or special, indirect, or consequential damages.

WARRANTY IS NOT TRANSFERABLE: This warranty is not assignable and applies only in favor of the original purchaser/user to whom delivered. Any such assignment or transfer shall void the warranties herein made and shall void all warranties, expressed, implied or statutory, except the one (1) and five (5) year warranties described above. These warranties are exclusive and in lieu of all other warranties, including implied warranty and merchantability or fitness for a particular purpose. There are no warranties which extend beyond the description on the face hereof.

TRANSPORTATION COSTS: Hoist will accept parts covered under this warranty freight collect, provided that shipment has received prior approval. Hoist is not responsible for any other transportation costs, but will ship freight collect parts either repaired or replaced under these warranties.

Hoist Fitness Systems
11900 Community Rd.
Poway, CA. 92064
(800)548-5438

PLEASE KEEP THIS FOR YOUR RECORDS