OWNER'S MANUAL

HD-3800

INNER / OUTER THIGH

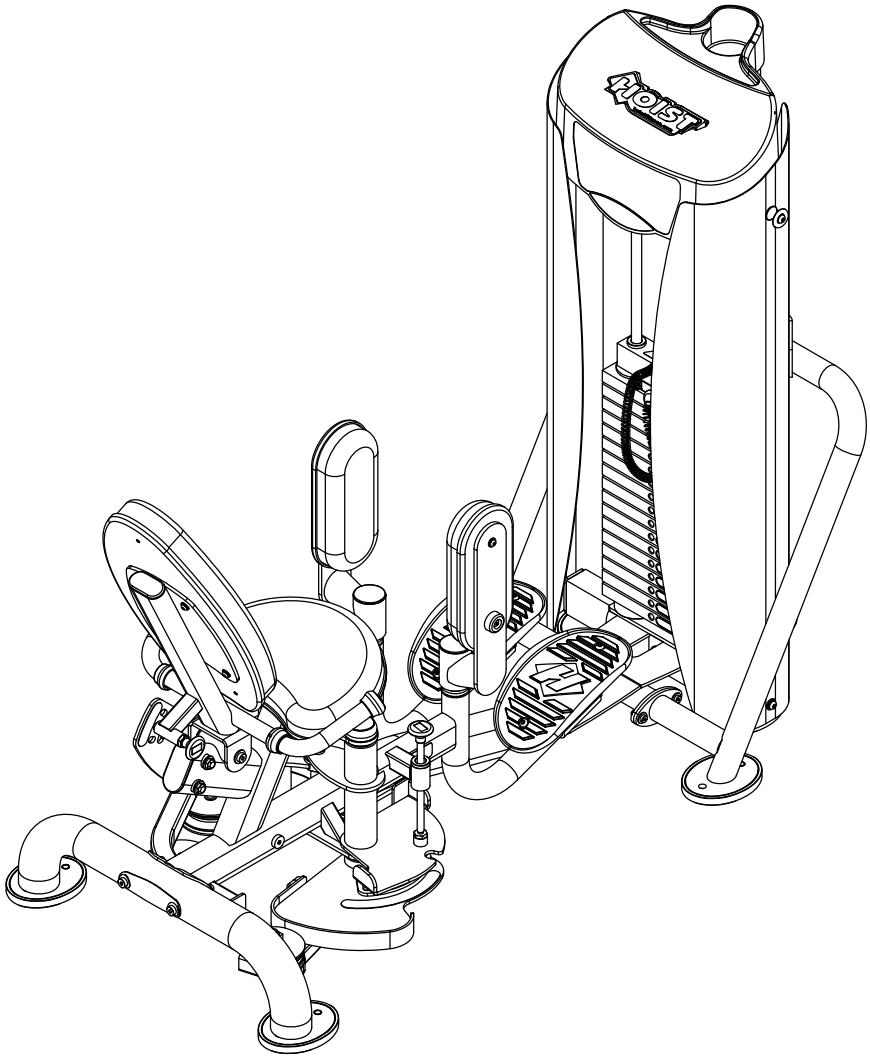

****WARNING!****

TO PREVENT POSSIBLE TIPPING, BOLT THIS UNIT TO THE EXERCISE FLOOR. FAILURE TO DO SO MAY RESULT IN SERIOUS INJURY OR DEATH.

Note: Both Serial Number and Model Number are Required when Ordering Parts

RECORD SERIAL NUMBER HERE

MACHINE CODE

A01

Customer Service

(800) 548-5438

(858) 578-7676

Fax

(858) 578-9558

www.facebook.com/hoistfitness

CONTENTS

INSTRUCTIONS 02
FRAME ASSEMBLY 04
PRE-ASSEMBLY..... 22
DECAL PLACEMENT..... 23
DECAL REFERENCE..... 24
PART LIST..... 26
ABBREVIATIONS..... 30
BOLT SIZING CHART..... 31
WASHER SIZING CHART..... 37
MAINTENANCE SCHEDULE..... 39
GENERAL MAINTENANCE INFORMATION..... 40
WEIGHT TRAINING TIPS..... 41
EXERCISE LOG..... 42
LIMITED WARRANTY..... 43

INSTRUCTIONS

Before beginning assembly please take the time to read instructions thoroughly. Please use the various lists in this manual to make sure that all parts have been included in your shipment. When ordering, use part number and description from the lists. Use only HOIST replacement parts when servicing. Failure to do so will void your warranty and could result in personal injury.

HOIST equipment is designed to provide the smoothest, most effective exercise motion possible. After assembly, you should check all functions to ensure correct operation. If you experience problems, first recheck the assembly instructions to locate any possible errors made during assembly. If you are unable to correct the problem, call your authorized HOIST dealer. Be sure to have your serial number and this manual when calling. When all parts have been accounted for, continue on.

TOOLS REQUIRED

Ratchet Wrench

1/2", 9/16" and 3/4" Sockets

Adjustable Wrench

Rubber Mallet

Tape Measure

Level

Hex Key Wrench Set

Two People

THIS PAGE WAS INTENTIONALLY LEFT BLANK

FRAME ASSEMBLY

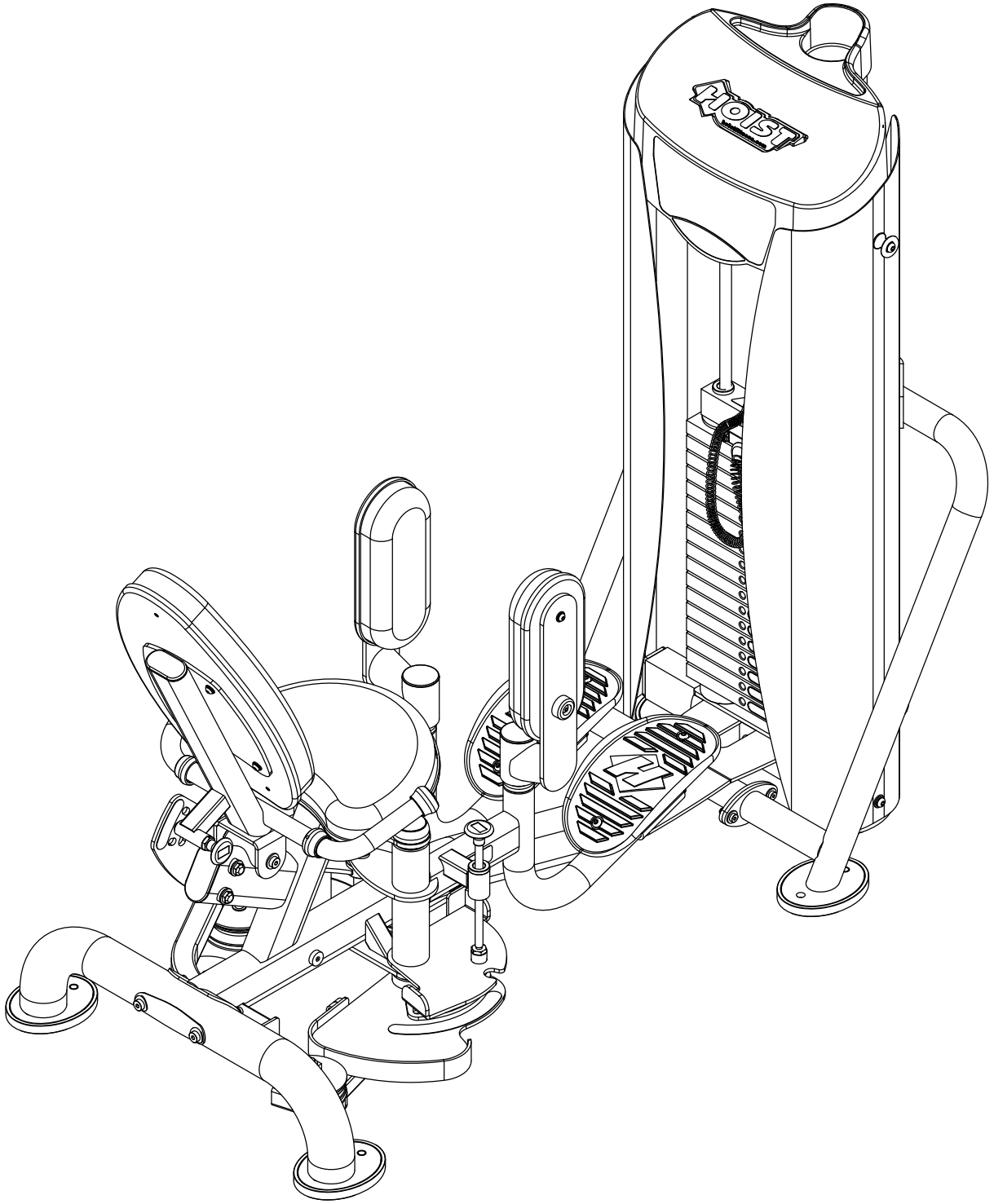

FRAME ASSEMBLY

CABLE PROFILE VIEW

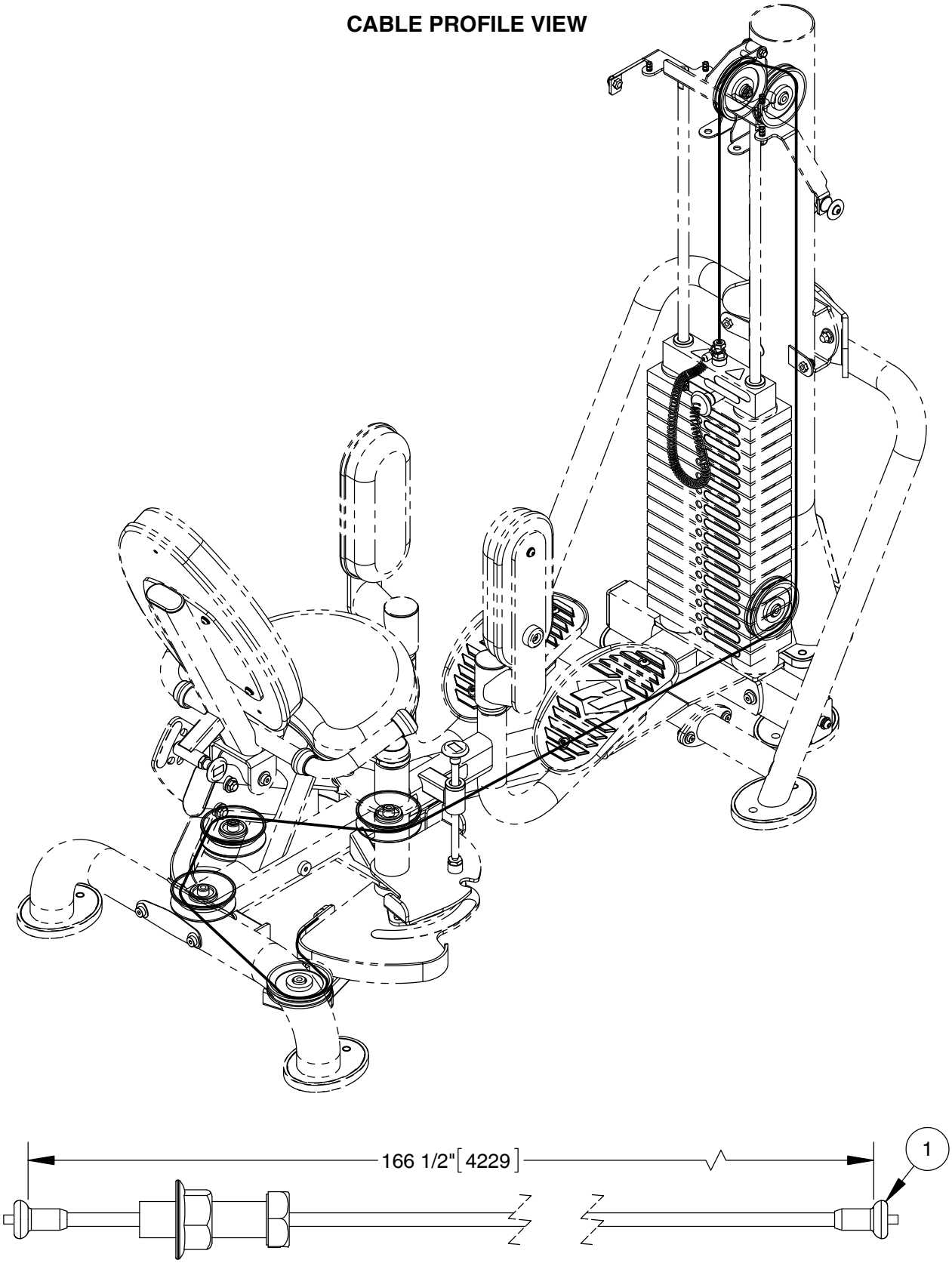

FRAME ASSEMBLY
ASSEMBLE WEIGHT CAGE FIRST

NOTE:
- HAND TIGHTEN HARDWARE.
- INSTALL CABLE AND PULLEYS AT THE SAME TIME.
- SOME PARTS MAY HAVE BEEN REMOVED FOR CLARITY.
- WRENCH TIGHTEN HARDWARE (72)

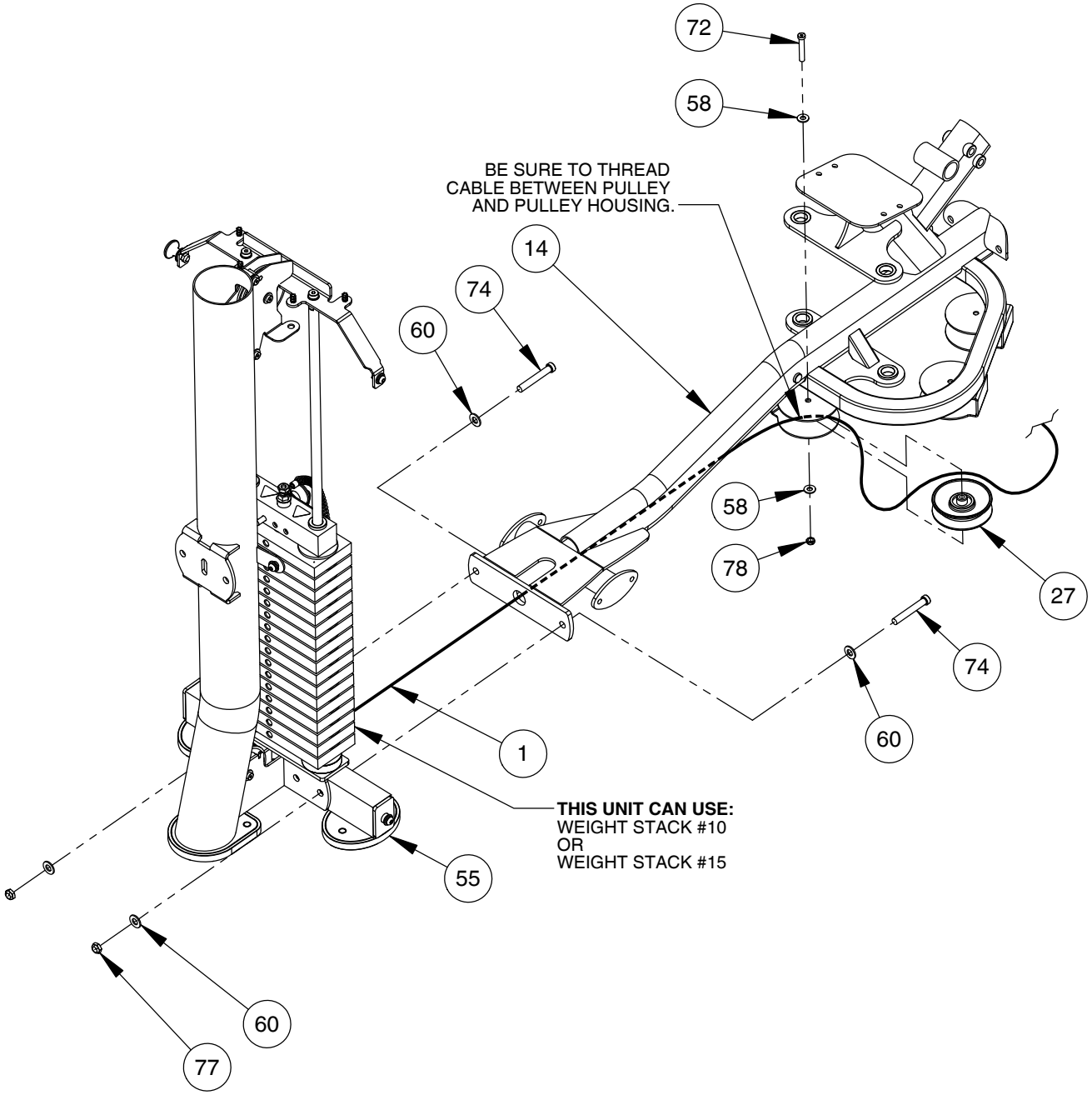

FRAME ASSEMBLY

NOTE:
- HAND TIGHTEN HARDWARE.
- SOME PARTS MAY HAVE BEEN REMOVED FOR CLARITY.

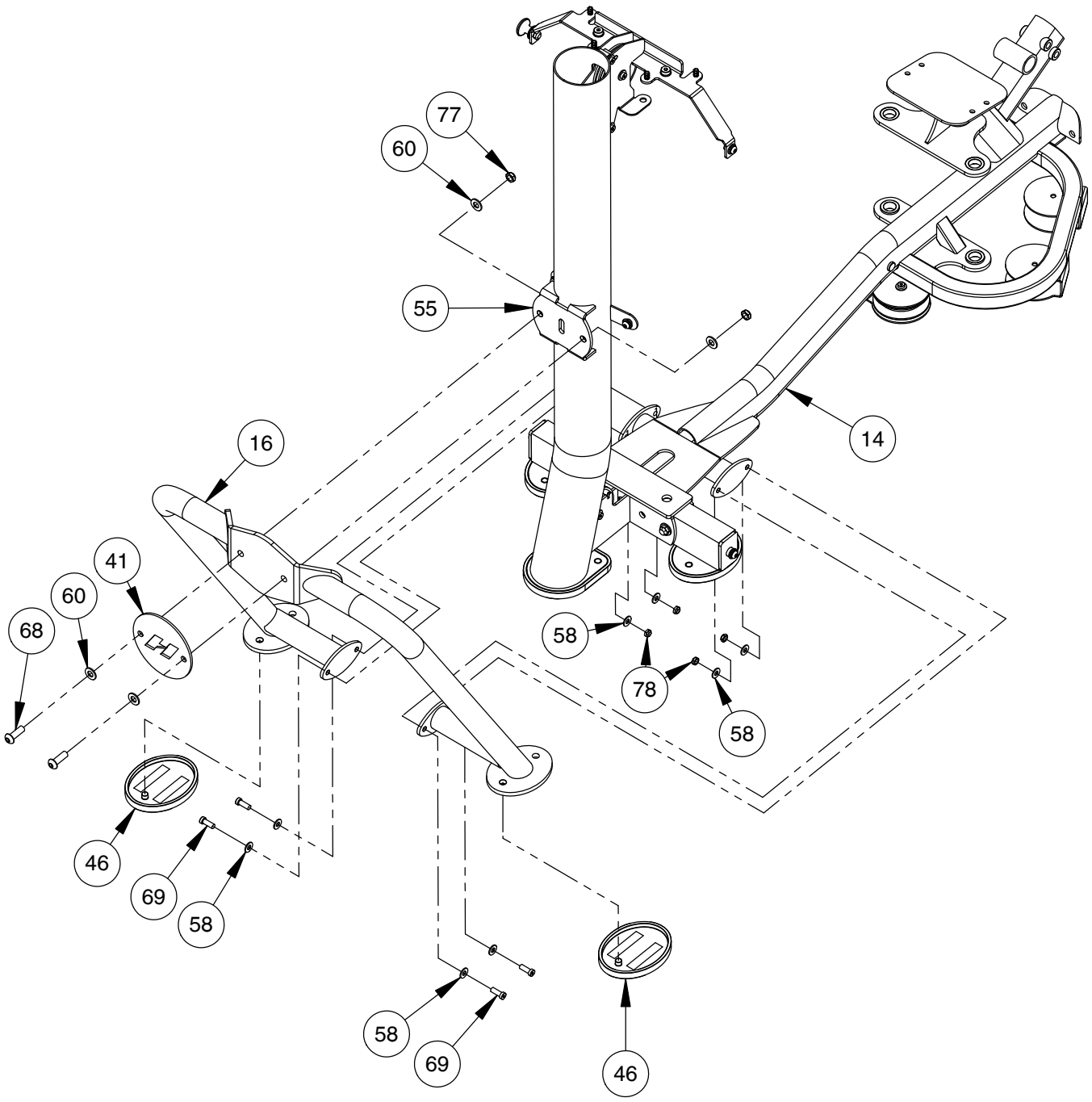

FRAME ASSEMBLY

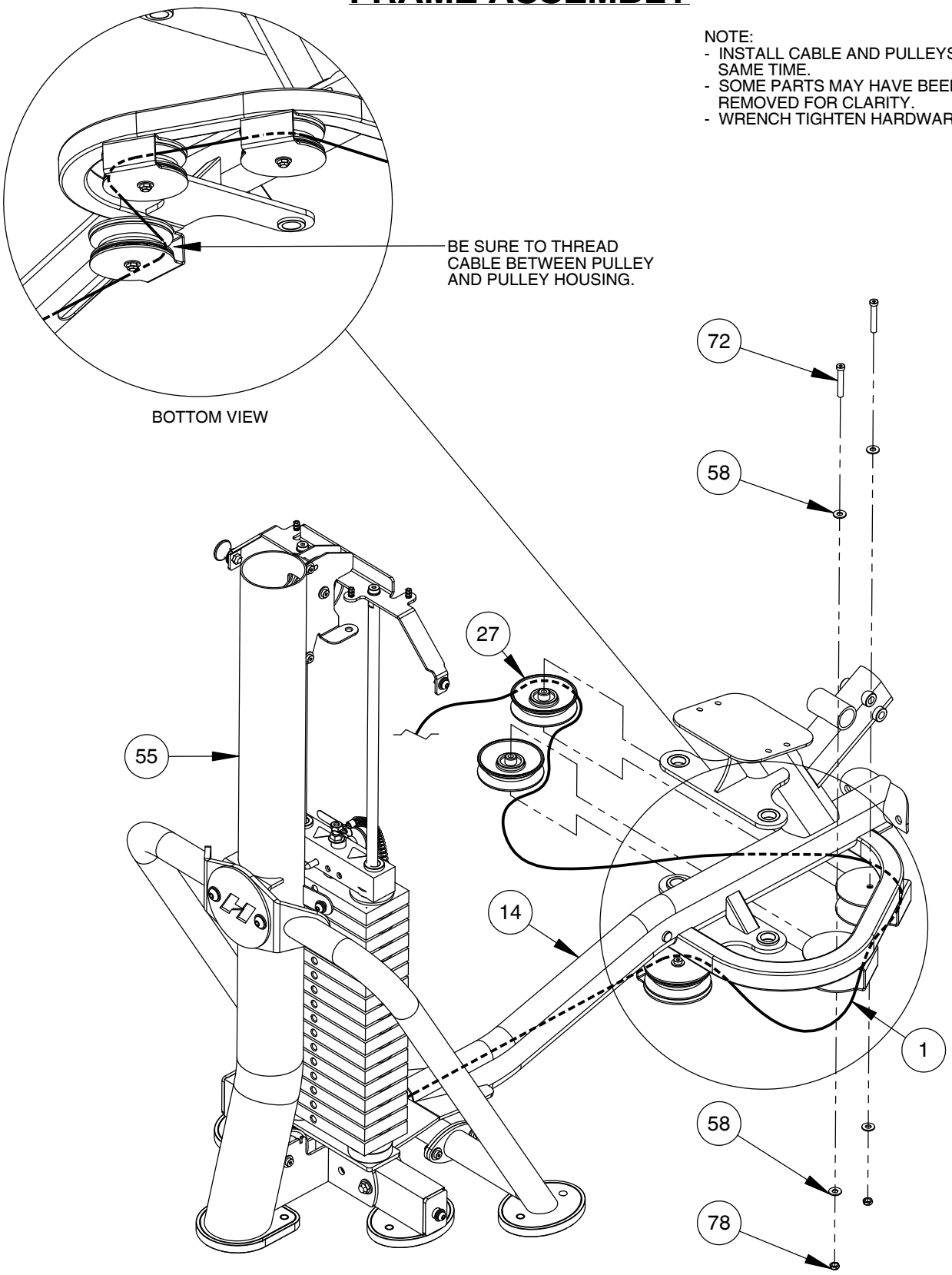

FRAME ASSEMBLY

NOTE:
- HAND TIGHTEN HARDWARE.
- SOME PARTS MAY HAVE BEEN REMOVED FOR CLARITY.

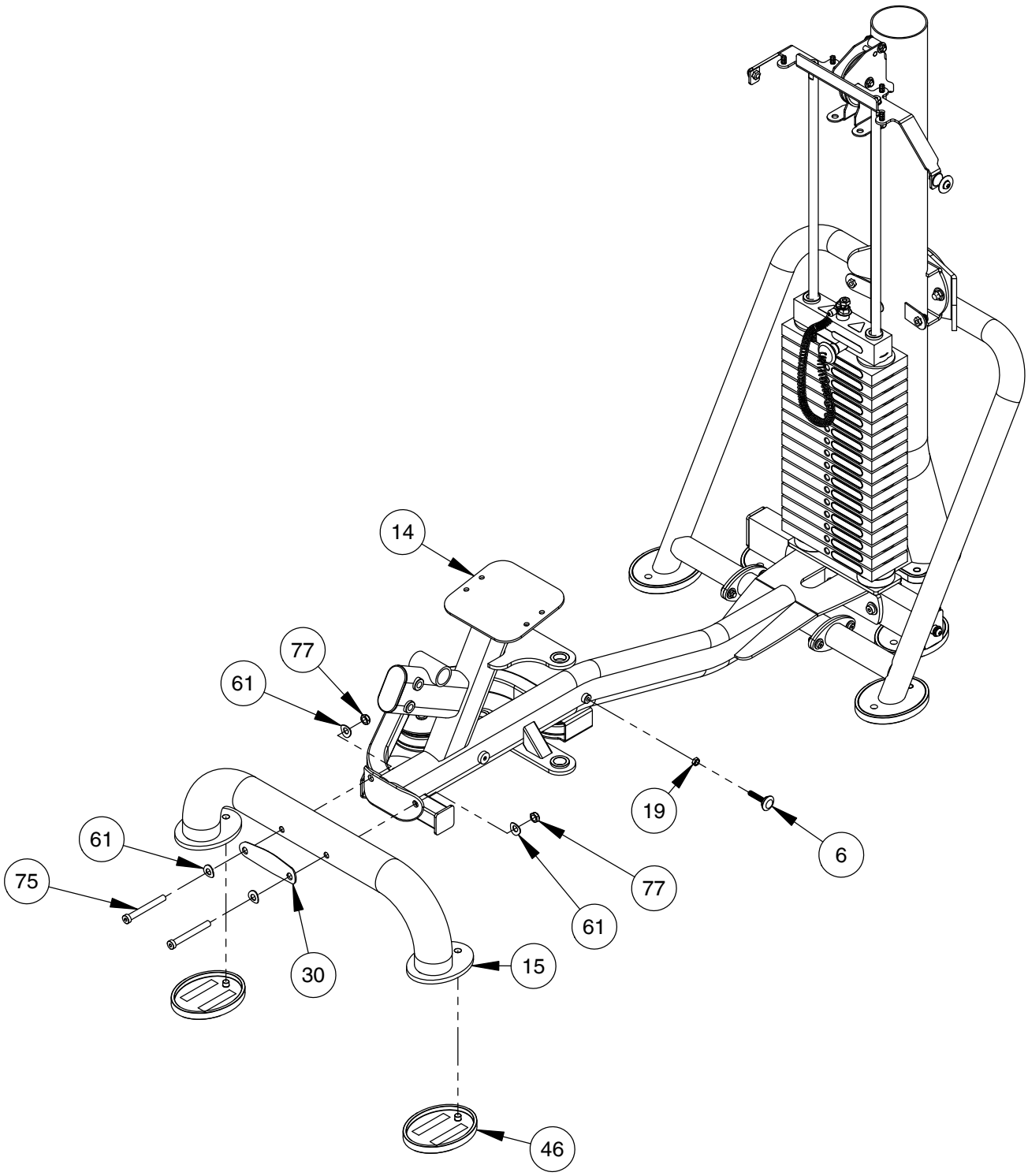

FRAME ASSEMBLY

NOTE:
- WRENCH TIGHTEN HARDWARE.
- REPEAT ASSEMBLY FOR OPPOSITE SIDE.
- SOME PARTS MAY HAVE BEEN REMOVED FOR CLARITY.

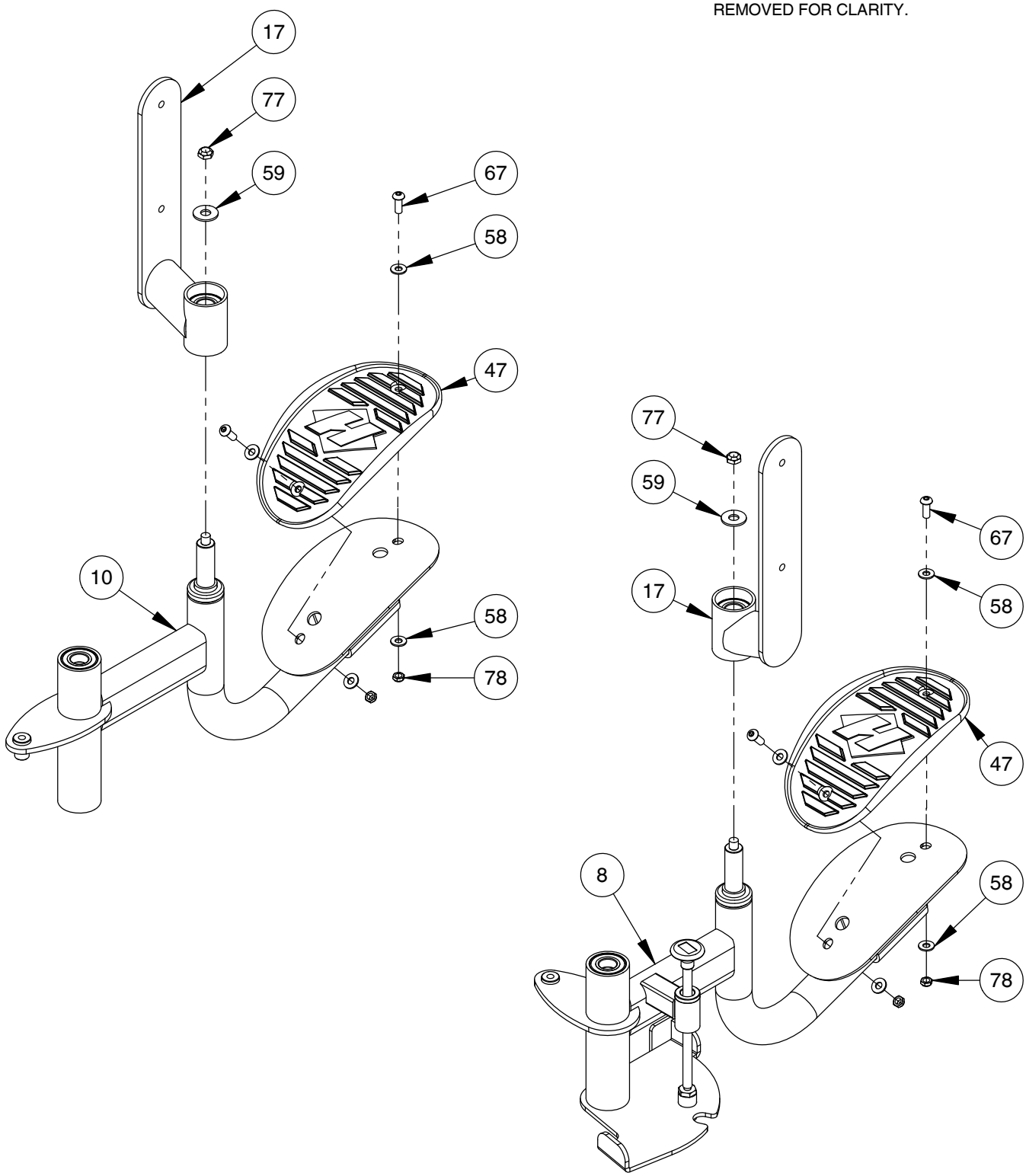

FRAME ASSEMBLY

NOTE:
- WRENCH TIGHTEN HARDWARE.
- SOME PARTS MAY HAVE BEEN REMOVED FOR CLARITY.

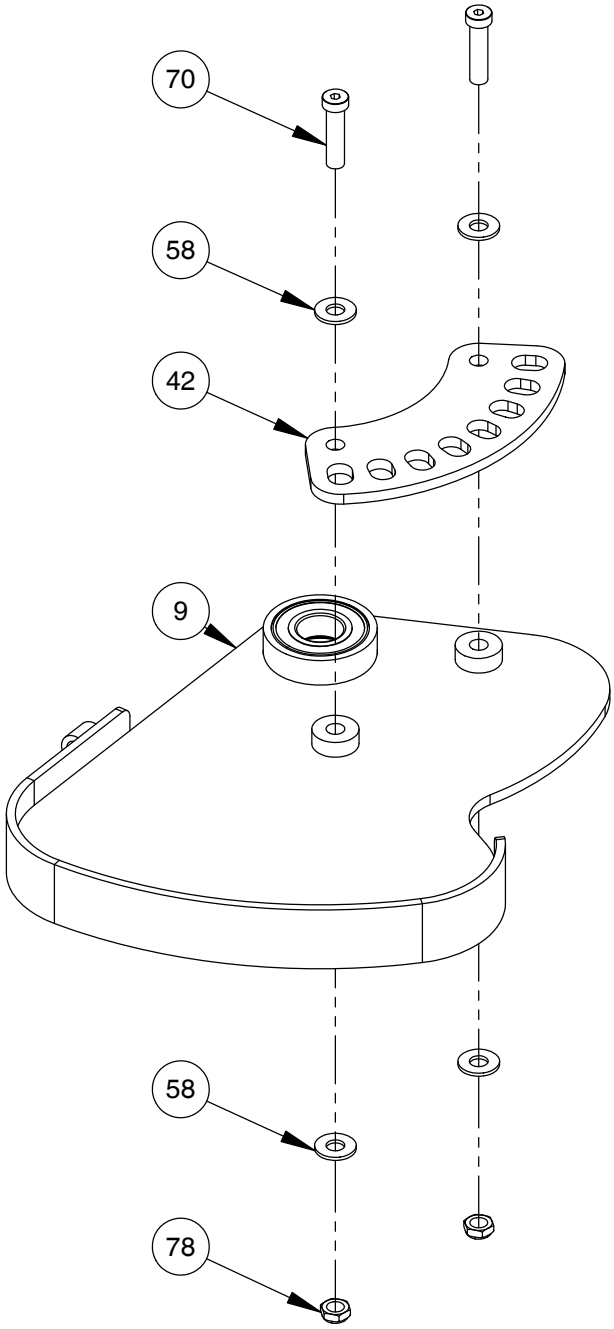

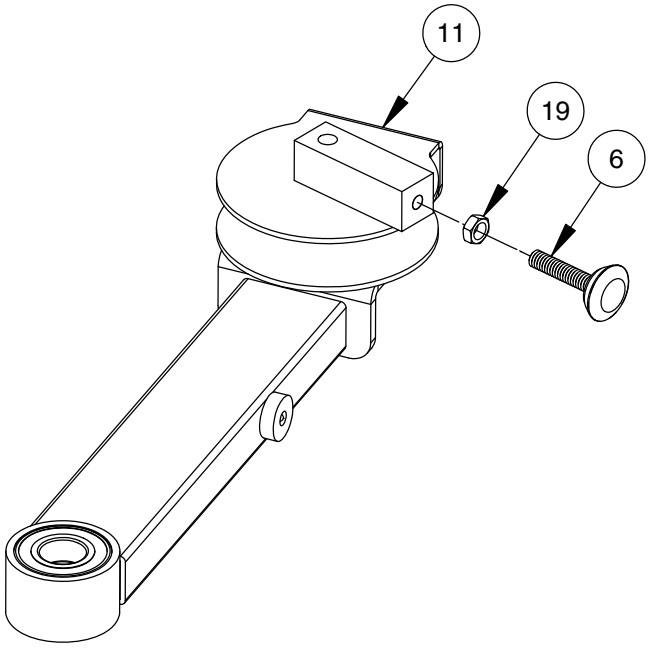

FRAME ASSEMBLY

NOTE:
- HAND TIGHTEN HARDWARE.
- SOME PARTS MAY HAVE BEEN REMOVED FOR CLARITY.

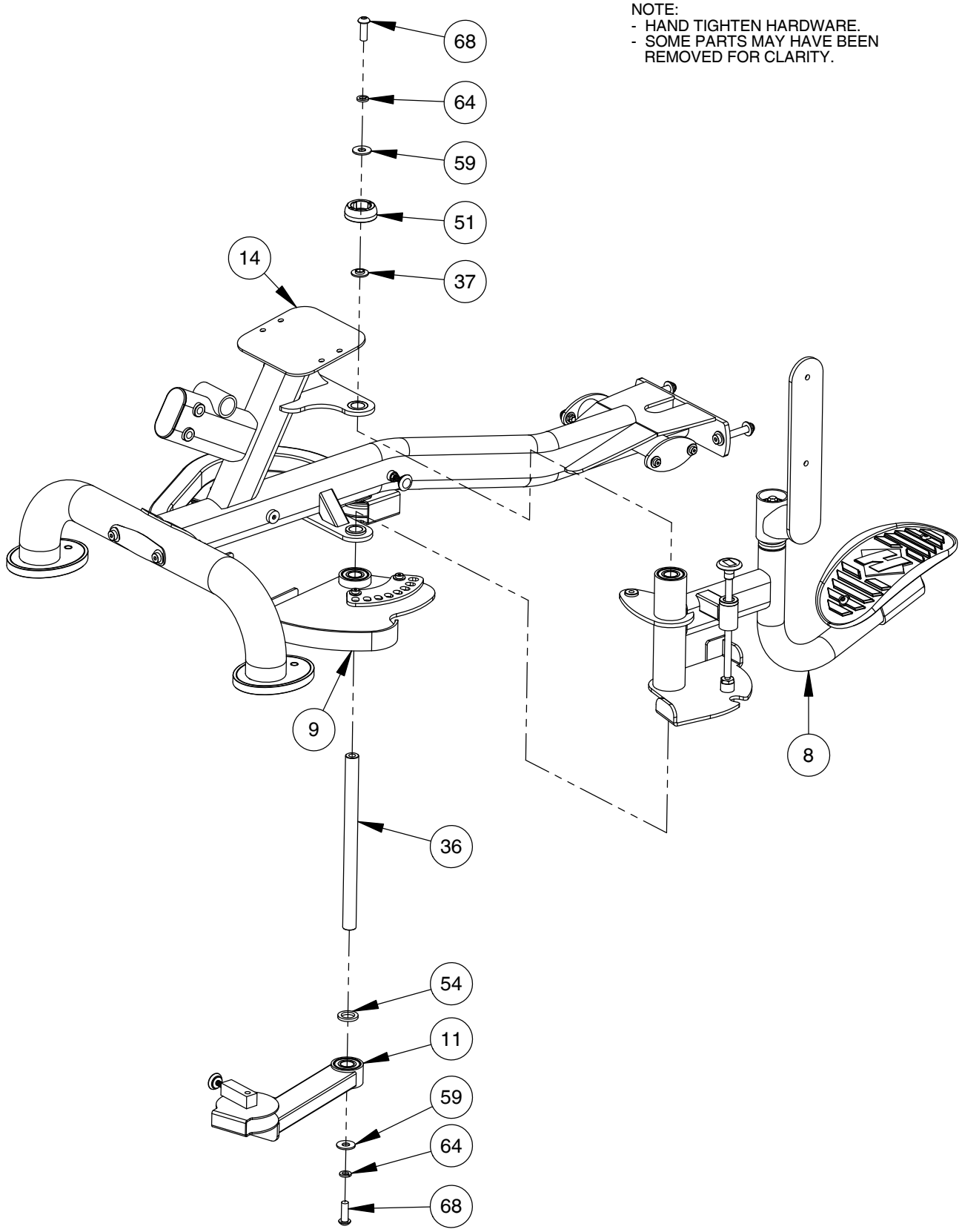

FRAME ASSEMBLY

NOTE:
- HAND TIGHTEN HARDWARE.
- SOME PARTS MAY HAVE BEEN REMOVED FOR CLARITY.

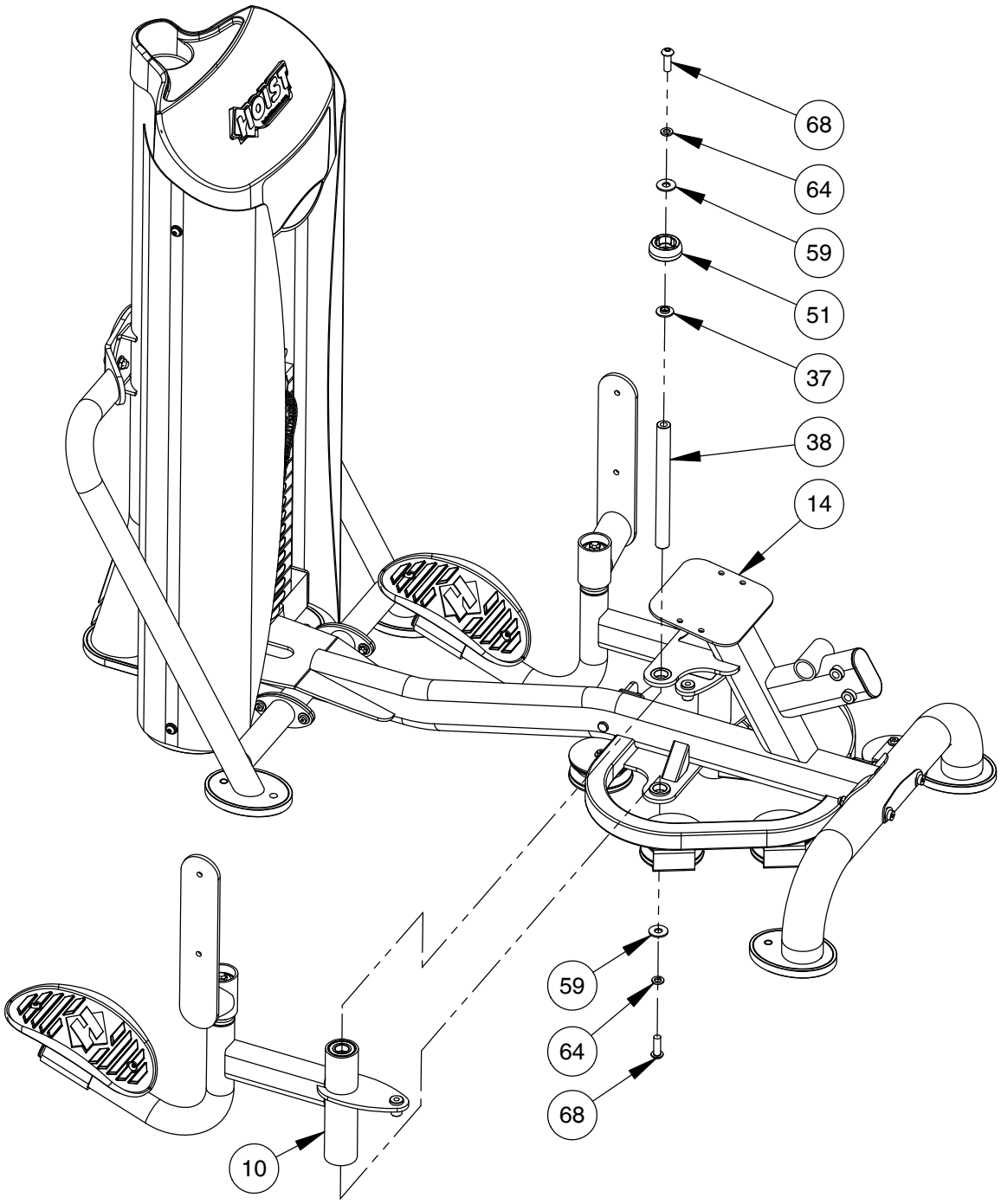

FRAME ASSEMBLY

NOTE:
- HAND TIGHTEN HARDWARE.
- SOME PARTS MAY HAVE BEEN REMOVED FOR CLARITY.

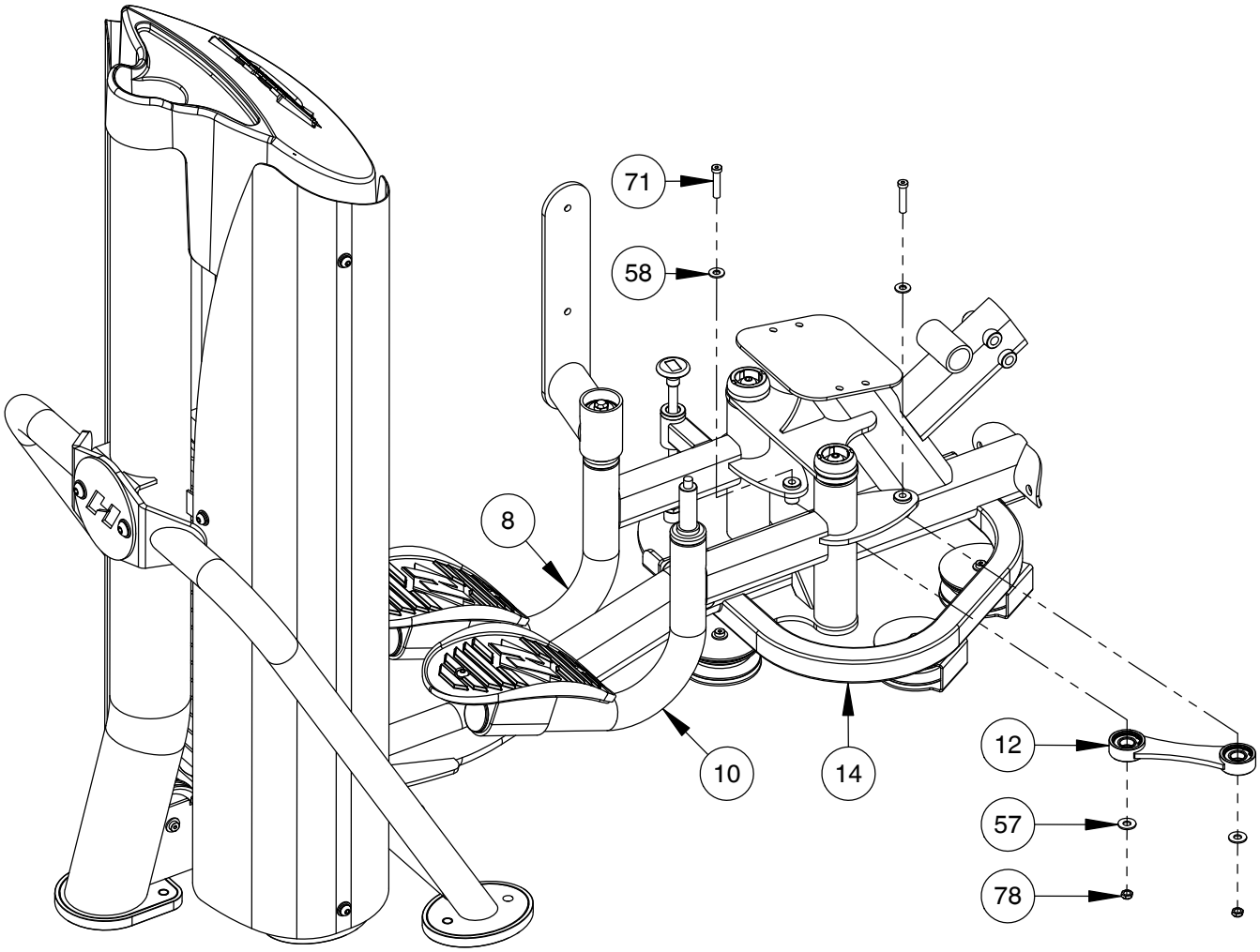

FRAME ASSEMBLY

NOTE:
- HAND TIGHTEN HARDWARE.
- SOME PARTS MAY HAVE BEEN REMOVED FOR CLARITY.

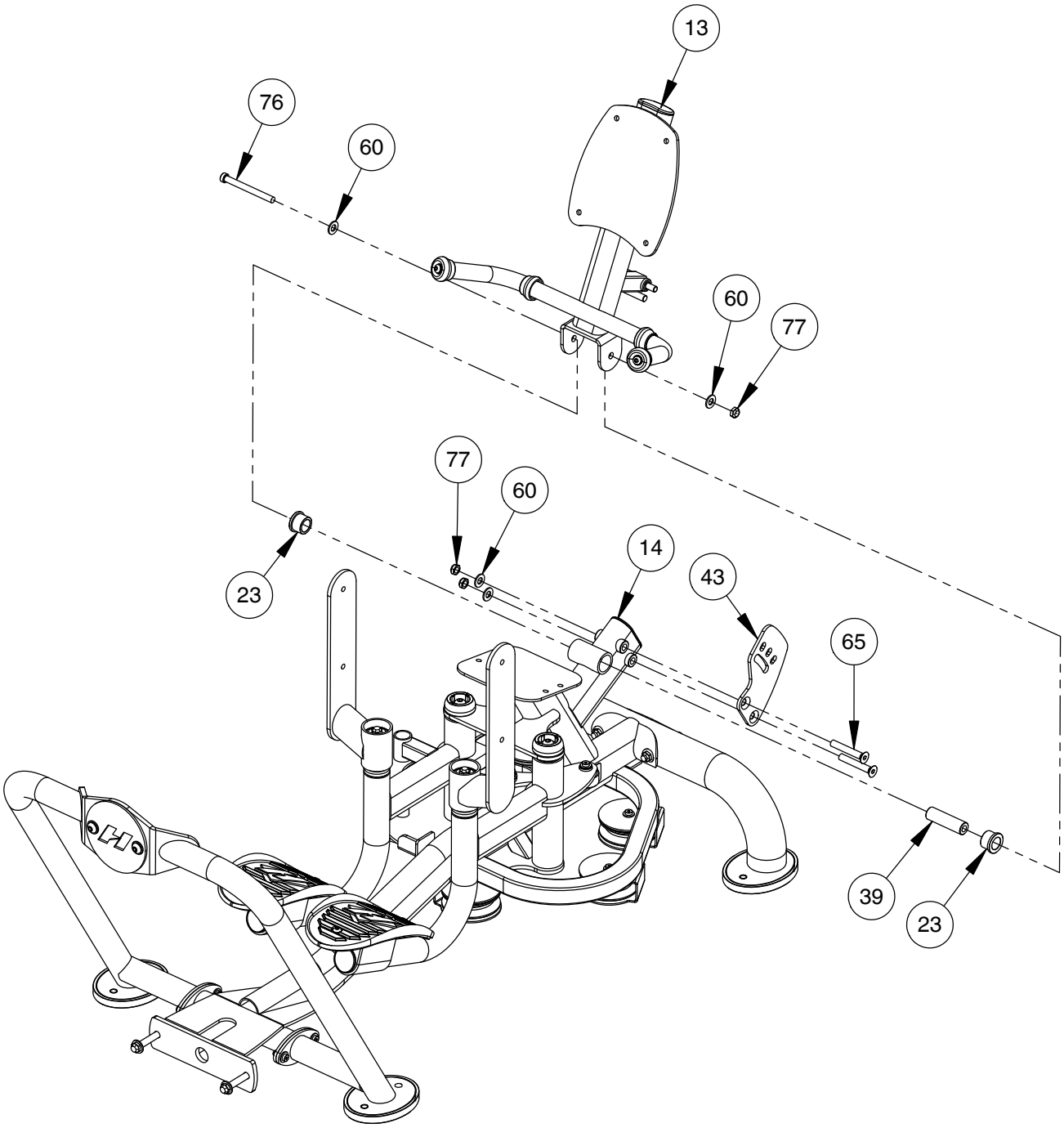

FRAME ASSEMBLY

NOTE:
- WRENCH TIGHTEN HARDWARE.
- INSTALL CABLE AND PULLEYS AT THE SAME TIME.
- SOME PARTS MAY HAVE BEEN REMOVED FOR CLARITY.

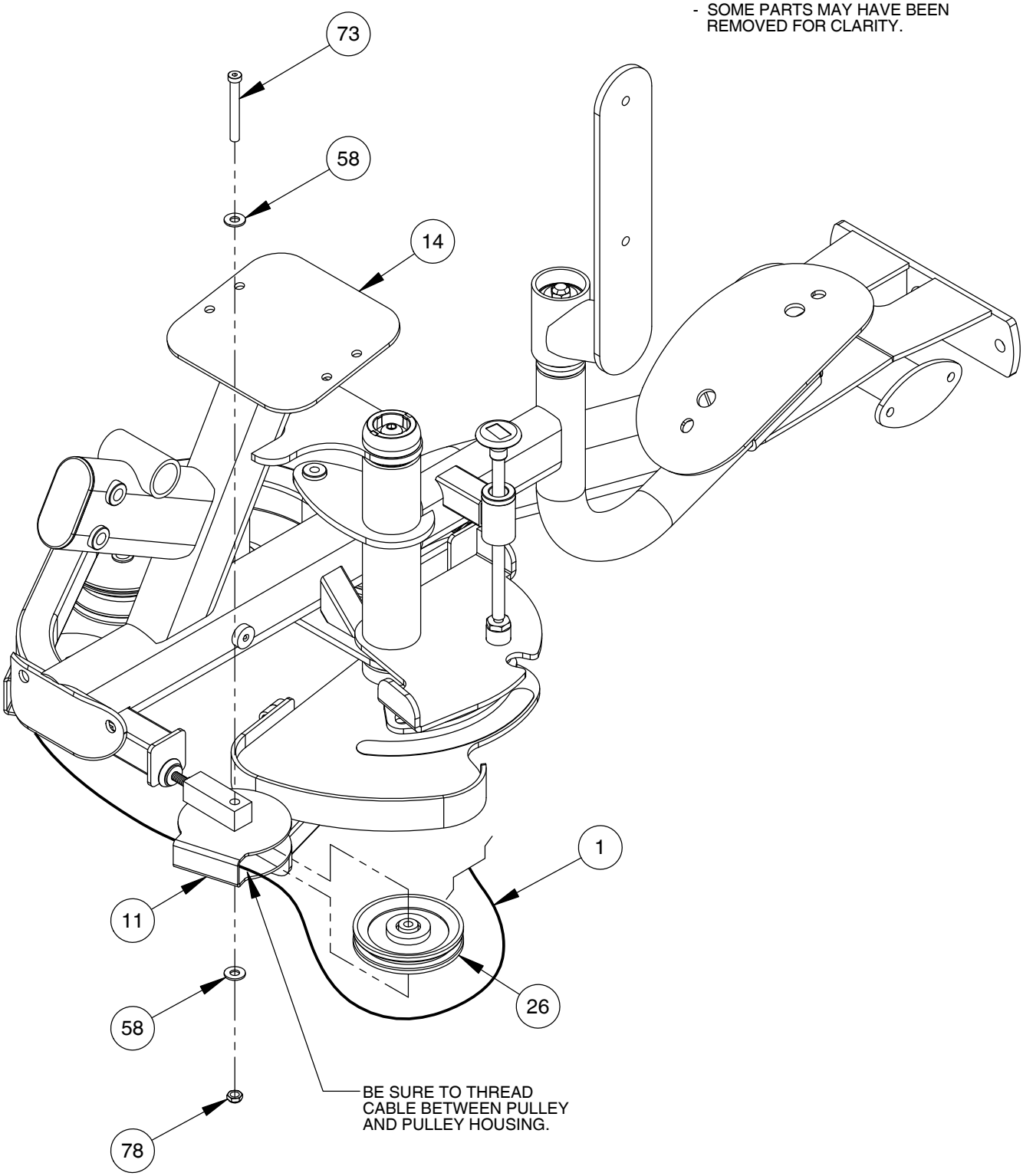

FRAME ASSEMBLY

NOTE:
- WRENCH TIGHTEN HARDWARE.
- SOME PARTS MAY HAVE BEEN REMOVED FOR CLARITY.

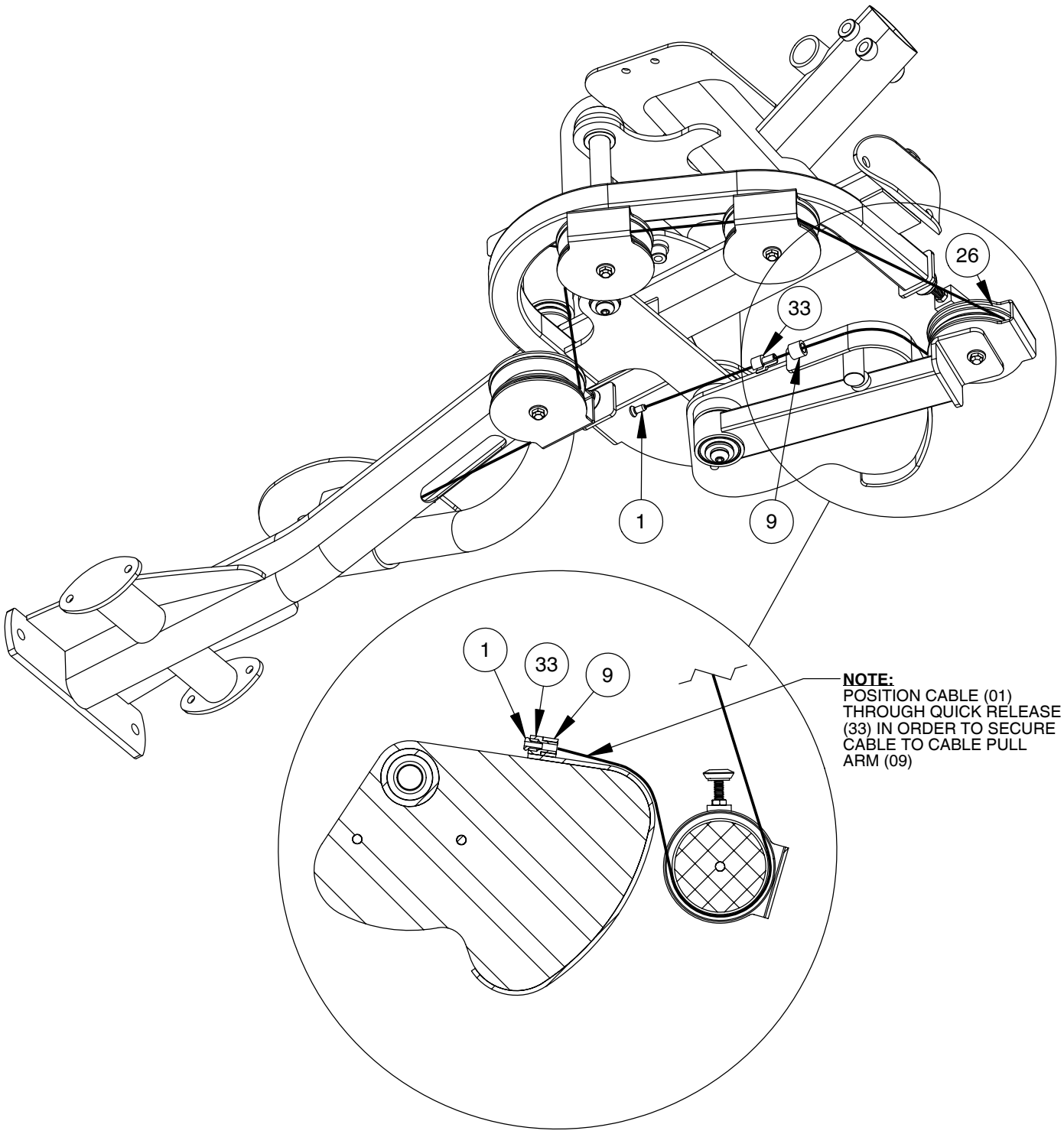

PROPERLY INSTALLED VIEW

FRAME ASSEMBLY

NOTE:
- WRENCH TIGHTEN HARDWARE.
- SOME PARTS MAY HAVE BEEN REMOVED FOR CLARITY.

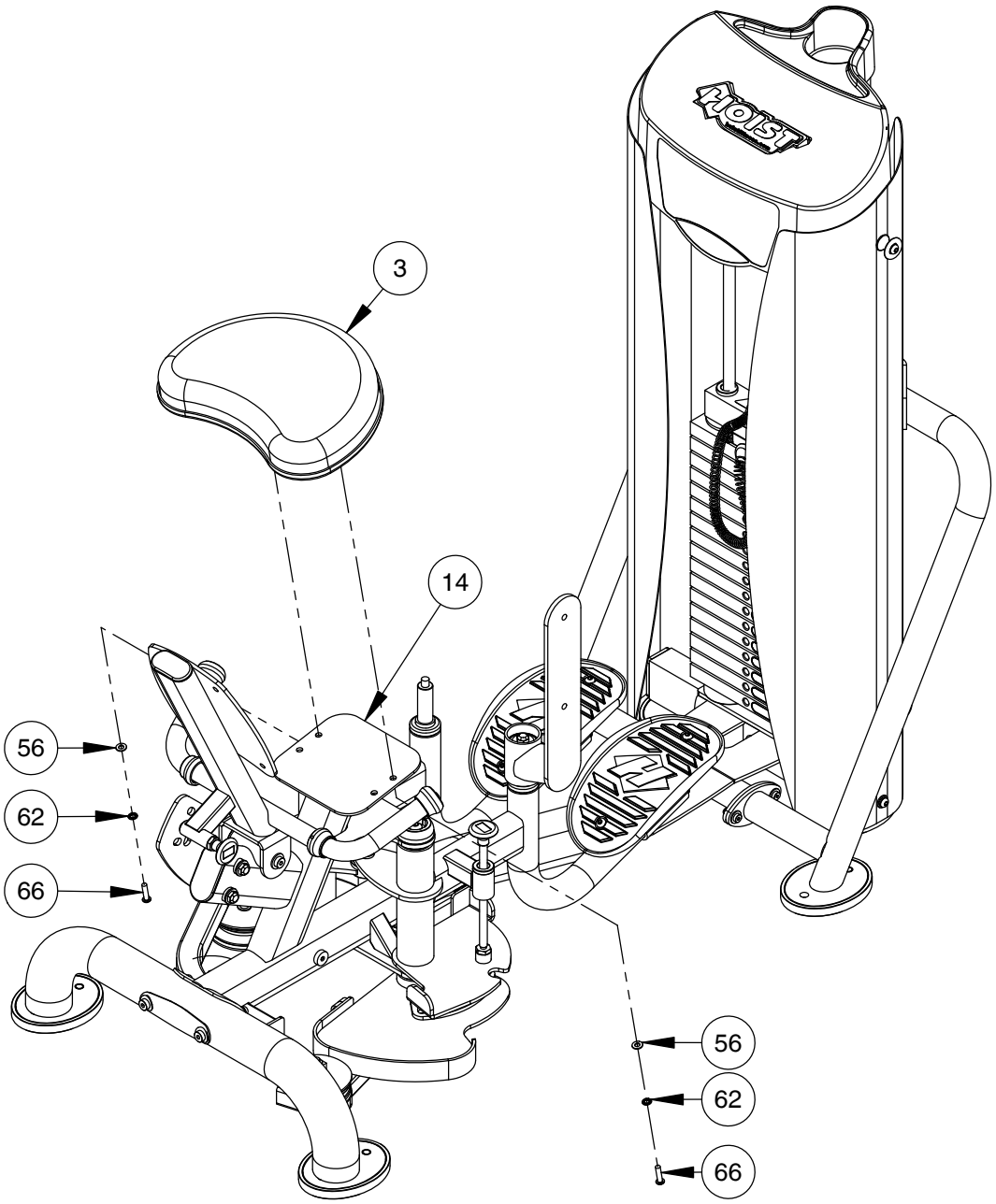

FRAME ASSEMBLY

NOTE:
- WRENCH TIGHTEN HARDWARE.
- SOME PARTS MAY HAVE BEEN REMOVED FOR CLARITY.

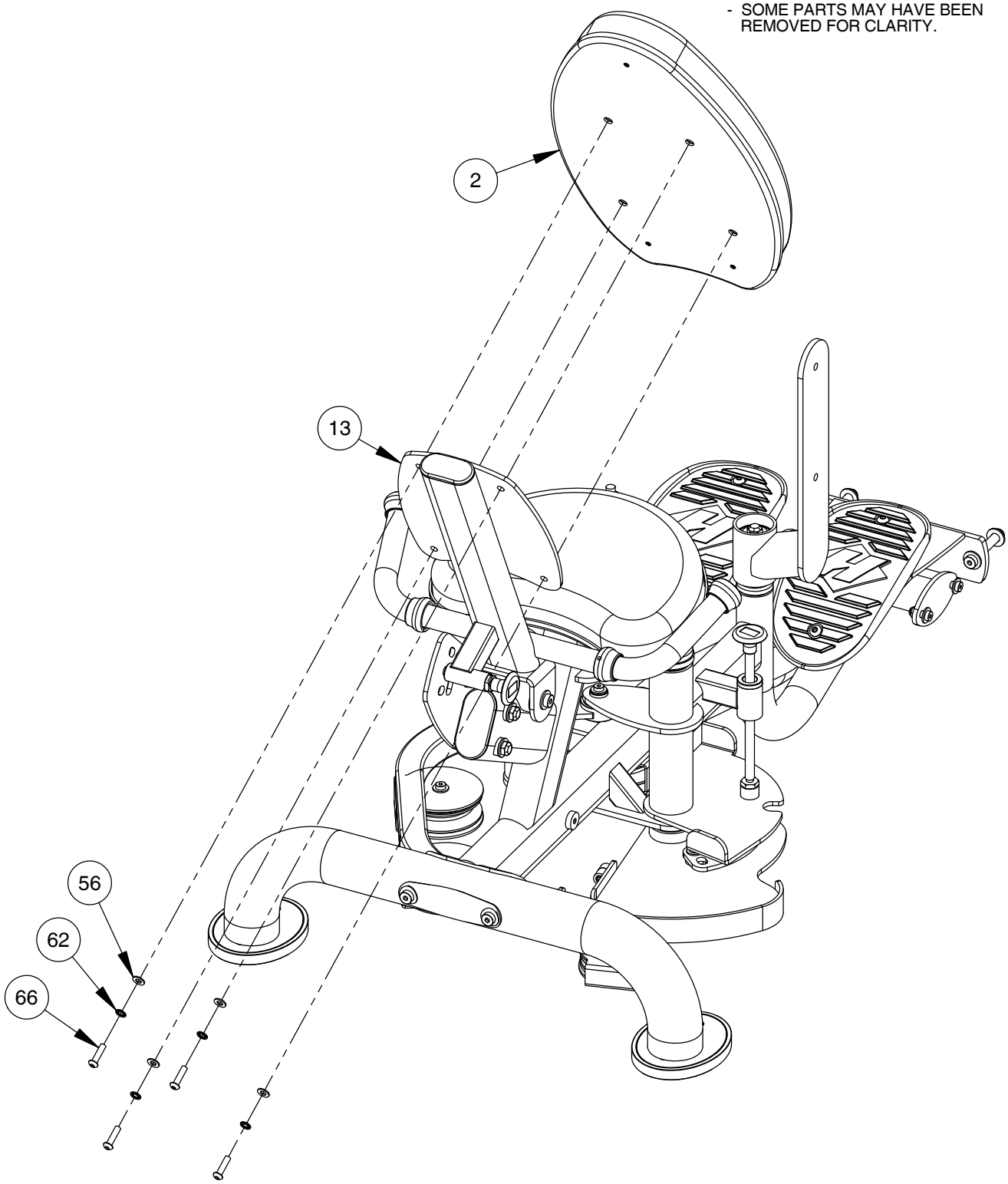

FRAME ASSEMBLY

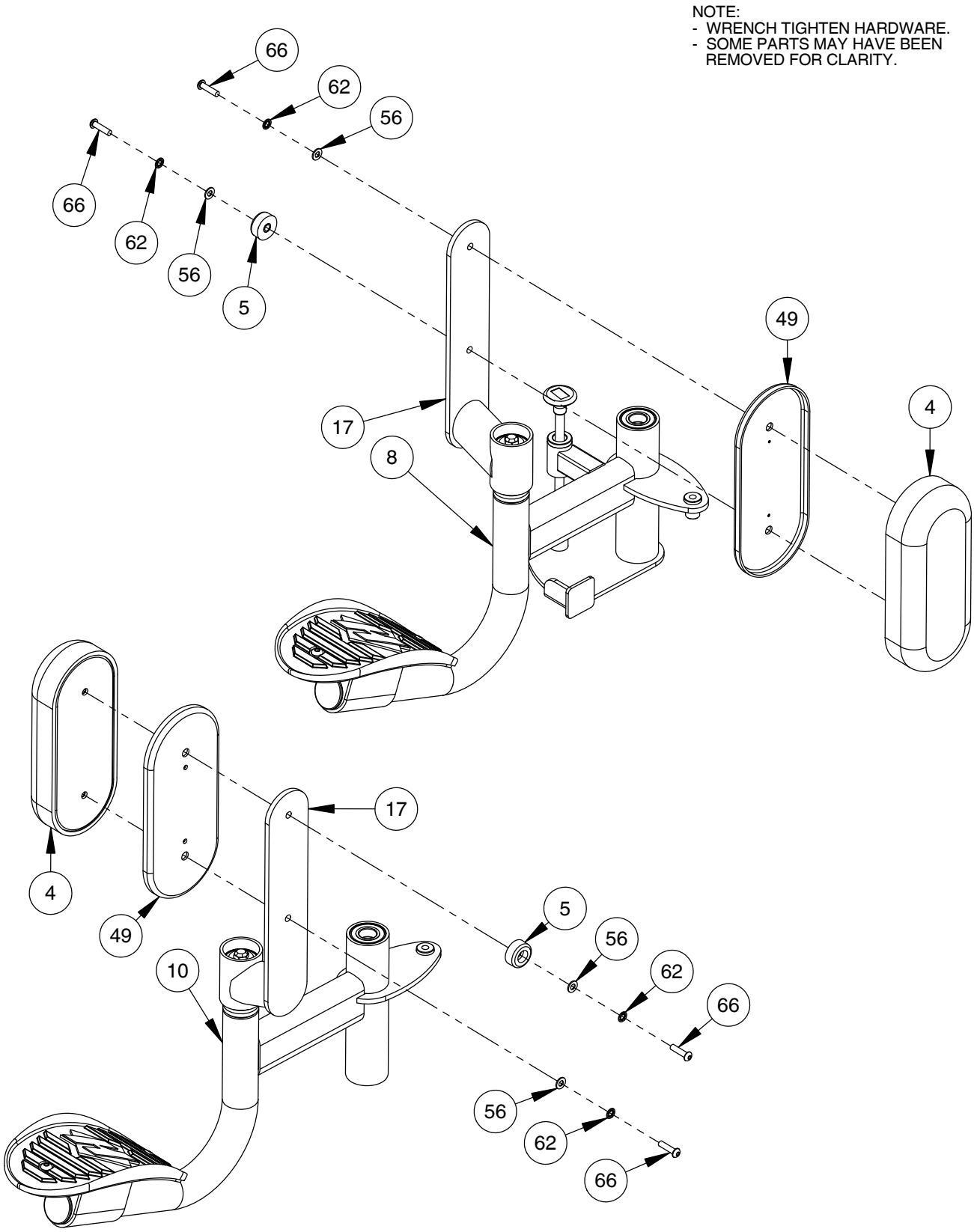

FRAME ASSEMBLY

NOTE:
- WRENCH TIGHTEN ALL PREVIOUSLY HAND TIGHTENED HARDWARE.
- SOME PARTS MAY HAVE BEEN REMOVED FOR CLARITY.

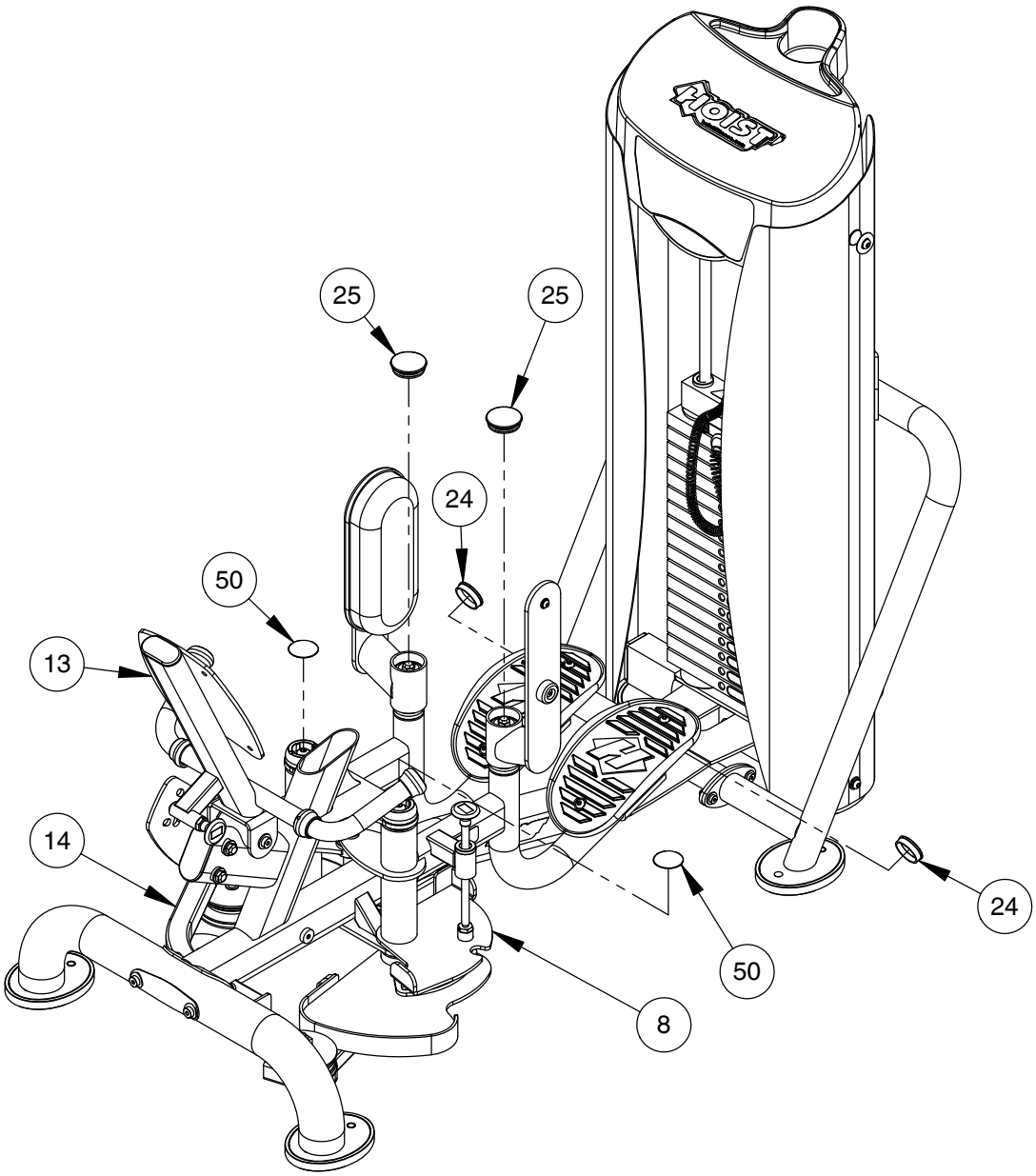

IMPORTANT

NOW THAT THE HD-3800 IS COMPLETELY ASSEMBLED TAKE TIME TO ASSURE THAT YOUR UNIT IS ASSEMBLED SQUARE AND PERPENDICULAR. IF NOT, IT WILL BE NECESSARY TO LOOSEN SOME FRAME HARDWARE TO RE-ALIGN THE FRAME AND RETIGHTEN BOLTS.

PRE-ASSEMBLY

NOTE:
- WRENCH TIGHTEN HARDWARE.

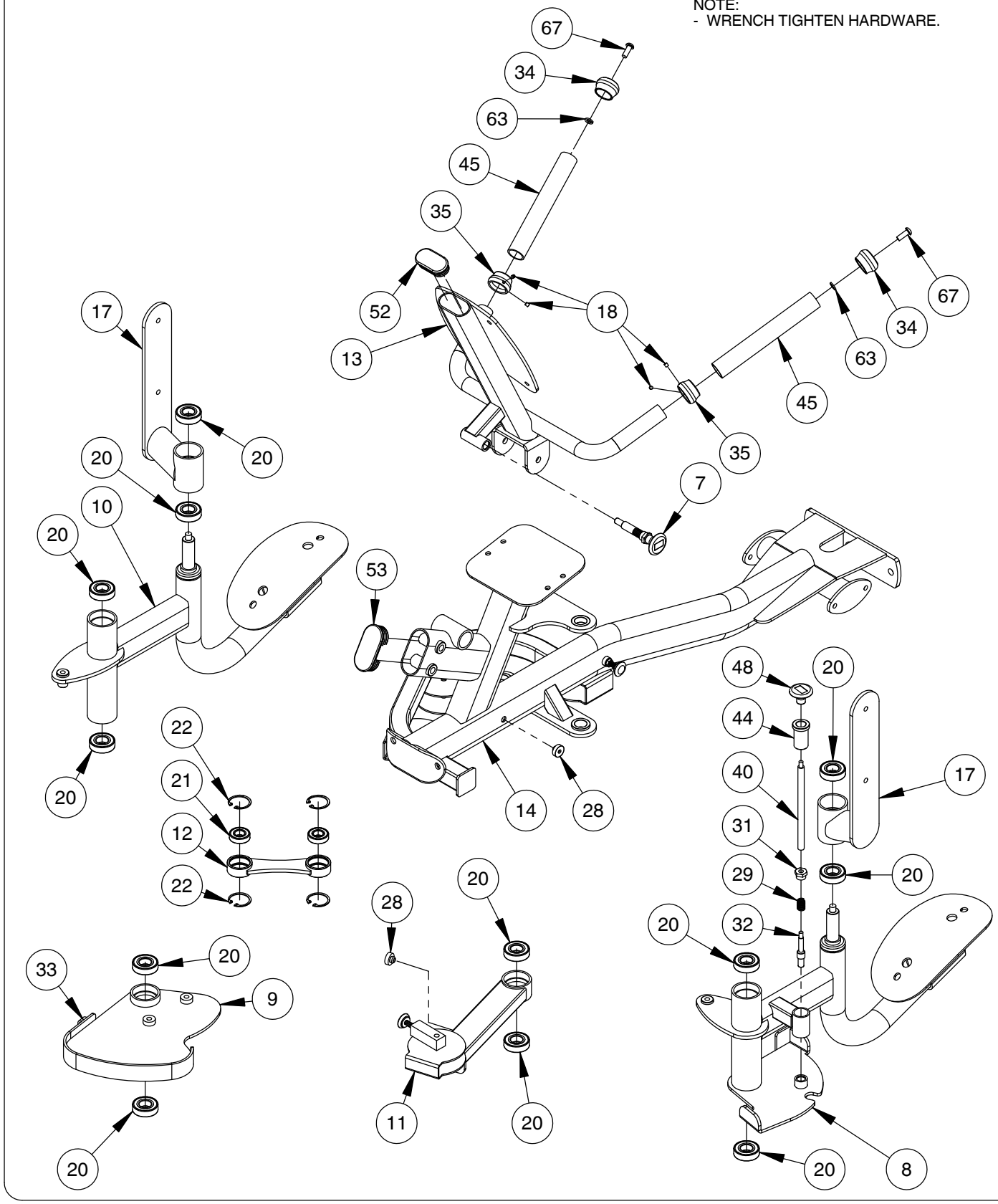

DECAL PLACEMENT

NOTE:
- ALL DECALS ARE CENTERED UNLESS OTHERWISE STATED.

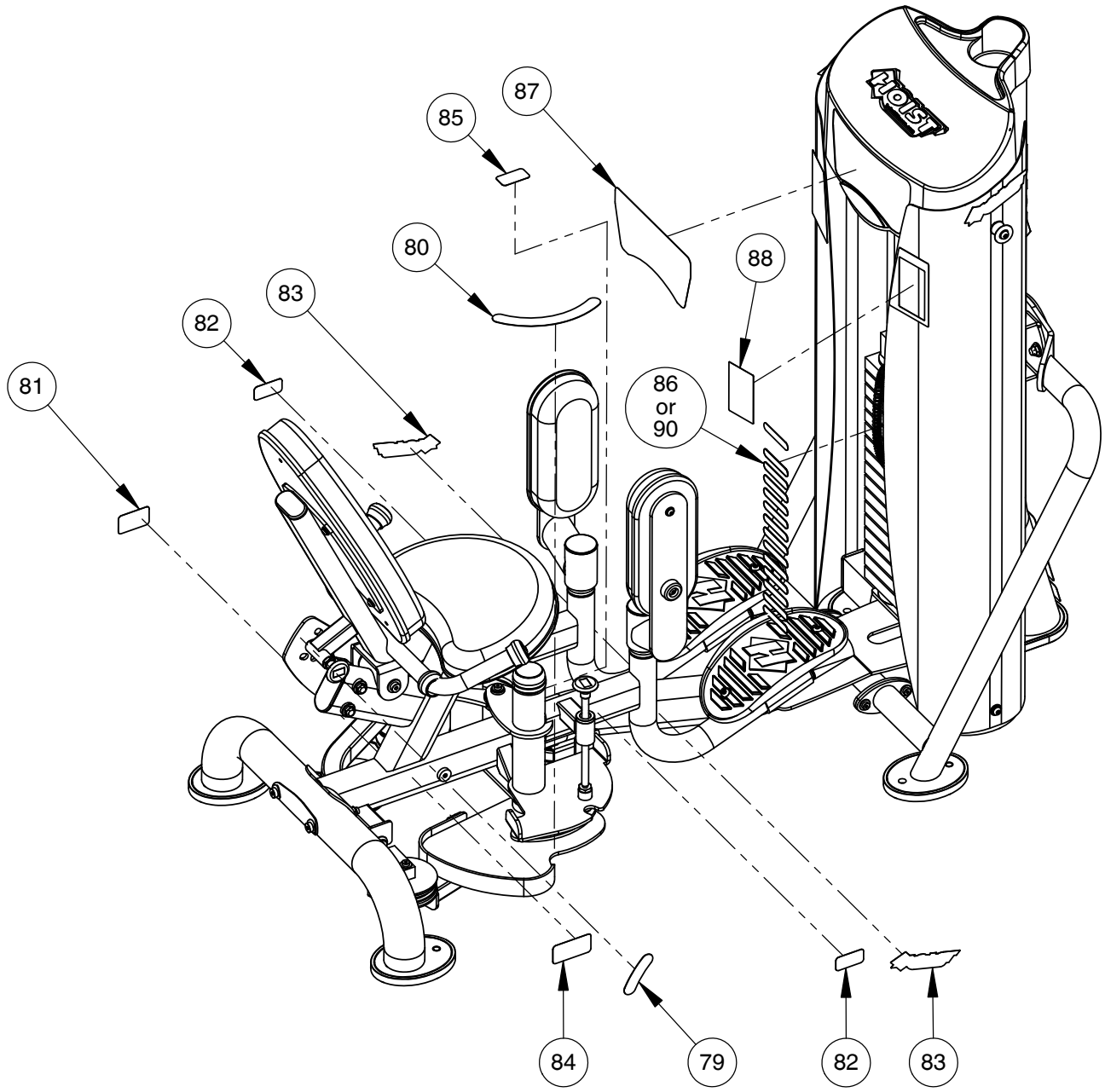

DECAL REFERENCE

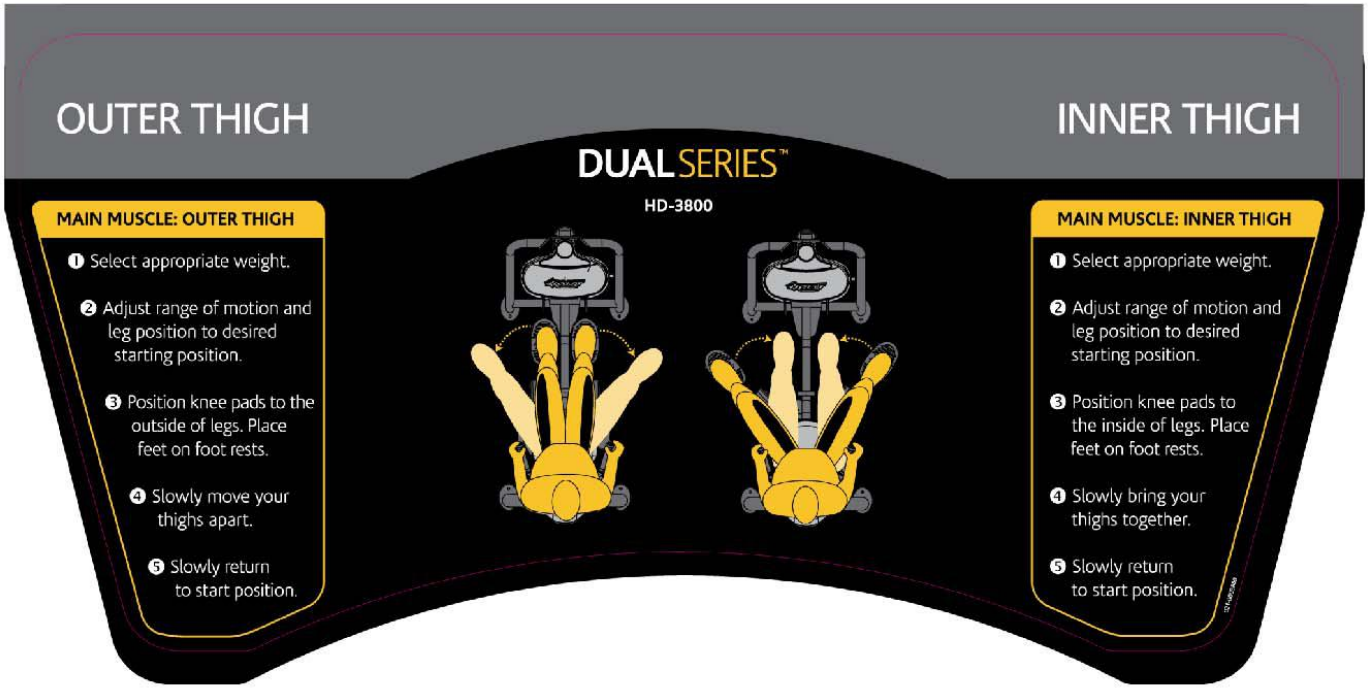

021-0003889

021-0003114

021-0003322

021-0003230

SERIAL # DECAL

DECAL REFERENCE

10 LBS / 5 KGS
20 LBS / 9 KGS
30 LBS / 14 KGS
40 LBS / 18 KGS
50 LBS / 23 KGS
60 LBS / 27 KGS
70 LBS / 32 KGS
80 LBS / 36 KGS
90 LBS / 41 KGS
100 LBS / 45 KGS
110 LBS / 50 KGS
120 LBS / 54 KGS
130 LBS / 59 KGS
140 LBS / 64 KGS
150 LBS / 68 KGS
160 LBS / 73 KGS
170 LBS / 77 KGS
180 LBS / 82 KGS

021-0003899

TO VISIT THE HOIST® MOBILE APPLICATION, SCAN THE QR CODE* BELOW WITH YOUR SMARTPHONE'S CAMERA.

THE APPLICATION PROVIDES A SHORT VIDEO, ALONG WITH ANSWERS TO:

- HOW DO I ADJUST THIS MACHINE?
- HOW DO I PERFORM THE EXERCISE?
- WHERE IS HOIST ON THE WEB?

SCAN HERE:

* USING YOUR SMARTPHONE, VISIT WWW.HOISTFITNESS.COM/SCAN TO DOWNLOAD A FREE QR CODE SCANNER.

021-003915

021-0003915

10 LBS / 5 KGS
20 LBS / 9 KGS
30 LBS / 14 KGS
40 LBS / 18 KGS
50 LBS / 23 KGS
60 LBS / 27 KGS
70 LBS / 32 KGS
80 LBS / 36 KGS
90 LBS / 41 KGS
100 LBS / 45 KGS
110 LBS / 50 KGS
125 LBS / 57 KGS
140 LBS / 64 KGS
155 LBS / 70 KGS
170 LBS / 77 KGS
185 LBS / 84 KGS
200 LBS / 91 KGS
215 LBS / 98 KGS

021-0003930

1
2
3

021-0003924

1 2 3 4 5 6 7

021-0003923

CAUTION
STAND CLEAR OF MOVING PARTS
021-0003093 (Rev.E)

021-0003093

PART LIST

NOTE: SOME OF THESE PARTS MAY COME PRE-INSTALLED

ITEM NO.	PART NUMBER	DESCRIPTION	QTY.
1	010-01C0436	HD-3800 CABLE 166 1/2" LG.	1
2	022-01PD2056	SEAT PAD ASSEMBLY	1
3	022-01PD2103-A	SEAT PAD ASSEMBLY	1
4	022-01PD2110-A	12" X 5" MOLDED PAD	2
5	019-0001003	BUMPER ∅1.50" X .625" T	2
6	020-0014027	ADJUSTABLE STOP	2
7	026-01X0186	PULL-PIN ASSEMBLY	1
8	026-01X3997	RIGHT MOVEMENT ARM	1
9	026-01X3998	CAM	1
10	026-01X3999	LEFT MOVEMENT ARM	1
11	026-01X4000	RESISTANCE ARM	1
12	026-01X6502	SYNCHRONIZING LINK	1
13	026-01X6503	BACK PAD MOUNT	1
14	026-01X6513	BASE FRAME ASSEMBLY	1
15	026-01X6613	FOOT ASSEMBLY	1
16	026-01X6615	WEIGHT CAGE BRACE	1
17	026-01X6622	ARM ASSEMBLY	2
18	011-0711001	SET SCREW: 1/4"-28 X .25" LG. (Ni)	4
19	012-0505001	3/8"-16UNC JAM NUT (Ni)	2
20	014-0012014	BEARING: FLANGELESS - 25mm I.D.	12
21	014-0012015	BEARING: FLANGELESS ∅1.65" O.D. X ∅.79" I.D. X .47" WIDE	2
22	014-0015039	42MM SNAP RING, INTERNAL	4
23	014-0101005	BUSHING: OILITE FLANGED Ø1.38" O.D. X Ø1.00" I.D. X .81" LG.	2
24	016-0201029	∅2.00" END CAP .06" WALL (BLACK)	2
25	016-0201052	∅2.375" END CAP (DOMED)	2
26	018-0001003	CABLE PULLEY: Ø4.50"	1
27	018-0002014	CABLE PULLEY: WIDE (BORED HUB) Ø4.50"	3
28	019-0001001	PLUG BUMPER	2
29	020-0011009	SPRING	1
30	026-01F0300	FLNG-B, .188" X Ø3.00" X 6.25" LG.	1
31	026-01M0128-1	PULL PIN CAP	1
32	026-01M0128-3	PULL-PIN PLUNGER	1
33	026-01M0199	QUICK RELEASE CABLE LOCK Ø 1/4"	1
34	026-01M0932	ALUMINIUM CAP: Ø1.25" ID	2
35	026-01M0933	ALUMINUM RING: Ø1.25" ID	2

PART LIST

NOTE: SOME OF THESE PARTS MAY COME PRE-INSTALLED

ITEM NO.	PART NUMBER	DESCRIPTION	QTY.
36	026-01M3118	PIVOT SHAFT	1
37	026-01M3119	FINISHED CAP WASHER	2
38	026-01M3151	PIVOT SHAFT	1
39	026-01M3152	SHAFT	1
40	026-01M3180	PULL PIN HANDLE EXTENSION	1
41	026-01P2653	'H' PLATE	1
42	026-01P4386	ROM PLATE	1
43	026-01P4400	ROM PLATE	1
44	026-01PL0134	GUIDE ROD BUSHING	1
45	026-01PL0235-08	GRIP: OPEN ENDED ∅ 1.4280" X 9.7500" LG.	2
46	026-01PL2122	OVAL-SHAPED RUBBER FOOT	4
47	026-01PL2124	FOOTPLATE, MOLDED	2
48	026-01PL2175	PULL-PIN KNOB	1
49	026-01PL2270	PLASTIC BACKING	2
50	026-01PL2371	3.75" ROLLER PAD END CAP	2
51	026-01PL2553	FINISH CAP BODY, ∅2.3750"	2
52	026-01PL2565	3.15" X 1.57" CAP	1
53	026-01PL2566	CAP 1.97" X 3.94"	1
54	026-01T4025	SPACER - ∅1.50 X .250" WALL X .188 LG.	1
55	ROC-IT WEIGHT CAGE - A2	ROC-IT WEIGHT CAGE	1
56	013-1002010	5/16" SAE FLAT WASHER (Ni)	10
57	013-1002003	3/8" X 25mm USS FLAT WASHER (Ni)	2
58	013-1002007	3/8" X 22mm FLAT WASHER (Ni)	30
59	013-1002004	1/2" X 34mm USS FLAT WASHER (Ni)	6
60	013-1002006	1/2" X 27mm SAE FLAT WASHER (Ni)	12
61	013-1009002	1/2" CURVED WASHER (Ni)	4
62	013-1010003	5/16" INTERNAL LOCK WASHER (Ni)	10
63	013-1006003	3/8" SPLIT LOCK WASHER (Ni)	2
64	013-1006004	1/2" SPLIT LOCK WASHER (Ni)	4
65	011-0702033	1/2"-13UNC X 3.25" FHS (Ni)	2
66	011-0701004	5/16"-18UNC X 1.25" BHCS (Ni)	10
67	011-0701020	3/8"-16UNC X 1.00" BHCS (Ni)	6
68	011-0701049	1/2"-13UNC X 1.50" BHCS (Ni)	6
69	011-0116142	3/8"-16UNC X 1.00" LOW HEAD SHCS (Ni)	4
70	011-0116144	3/8"-16UNC X 1.50" LOW HEAD SHCS (Ni)	2

PART LIST

NOTE: SOME OF THESE PARTS MAY COME PRE-INSTALLED

ITEM NO.	PART NUMBER	DESCRIPTION	QTY.
71	011-0116145	3/8"-16UNC X 1.75" LOW HEAD SHCS (Ni)	2
72	011-0116147	3/8"-16UNC X 2.25" LOW HEAD SHCS (Ni)	3
73	011-0116150	3/8"-16UNC X 3.00" LOW HEAD SHCS (Ni)	1
74	011-0116116	1/2"-13UNC X 3.25" LOW HEAD SHCS (Ni)	2
75	011-0116119	1/2"-13UNC X 4.00" LOW HEAD SHCS (Ni)	2
76	011-0116122	1/2"-13UNC X 4.75" LOW HEAD SHCS (Ni)	1
77	012-0504002	1/2"-13 UNC THIN NYLOCK NUT (Ni)	11
78	012-0504005	3/8"-16 UNC THIN NYLOCK NUT (Ni)	16
79	021-0003924	HD-3800 ROM Back Pad	1
80	021-0003923	HD-3800 ROM Knee Pad	1
81	SERIAL # DECAL	DECAL HOIST SERIAL # 1.63" X 2.63"	1
82	021-0003093	DECAL MOVING PARTS 1.20" X 2.38" (HOR)	2
83	021-0003230	DECAL HOIST 1.625" X 6.0613"	2
84	021-0003114	DECAL PINCH POINT 1.63" X 3.25" (HORIZONTAL)	1
85	021-0003322	DECAL PINCH POINT 1.25" X 2.31" (VERTICAL)	1
86	021-0003899	HD-3100, 3600, 3800 WEIGHT STACK DECALS	1
87	021-0003889	PLACARD RS-3800 INNER/OUTER THIGH	1
88	021-0003915	HD QR DECAL	1
89	021-0003914	DUAL SERIES EYEBALL DECAL	1
90	021-0003930	HDG WEIGHT STACK DECAL #15	1

THIS PAGE WAS INTENTIONALLY LEFT BLANK

ABBREVIATIONS

BZ = Black Zinc
Ni = Nickel Plated
SS = Stainless Steel
WZ = White Zinc

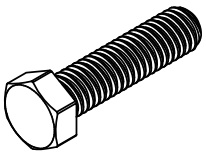

HHB = Hex Head Bolt

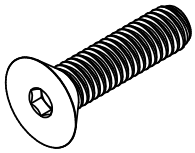

FHCS = Flat Head Cap Screw

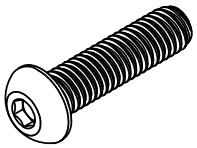

BHCS = Button Head Cap Screw

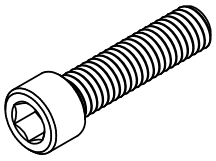

SHCS = Socket Head Cap Screw

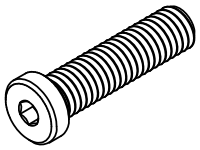

Low Head SHCS = Low Head Socket Head Cap Screw

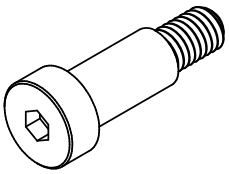

SHSS = Socket Head Shoulder Screw

BOLT SIZING CHART

HEX HEAD BOLT

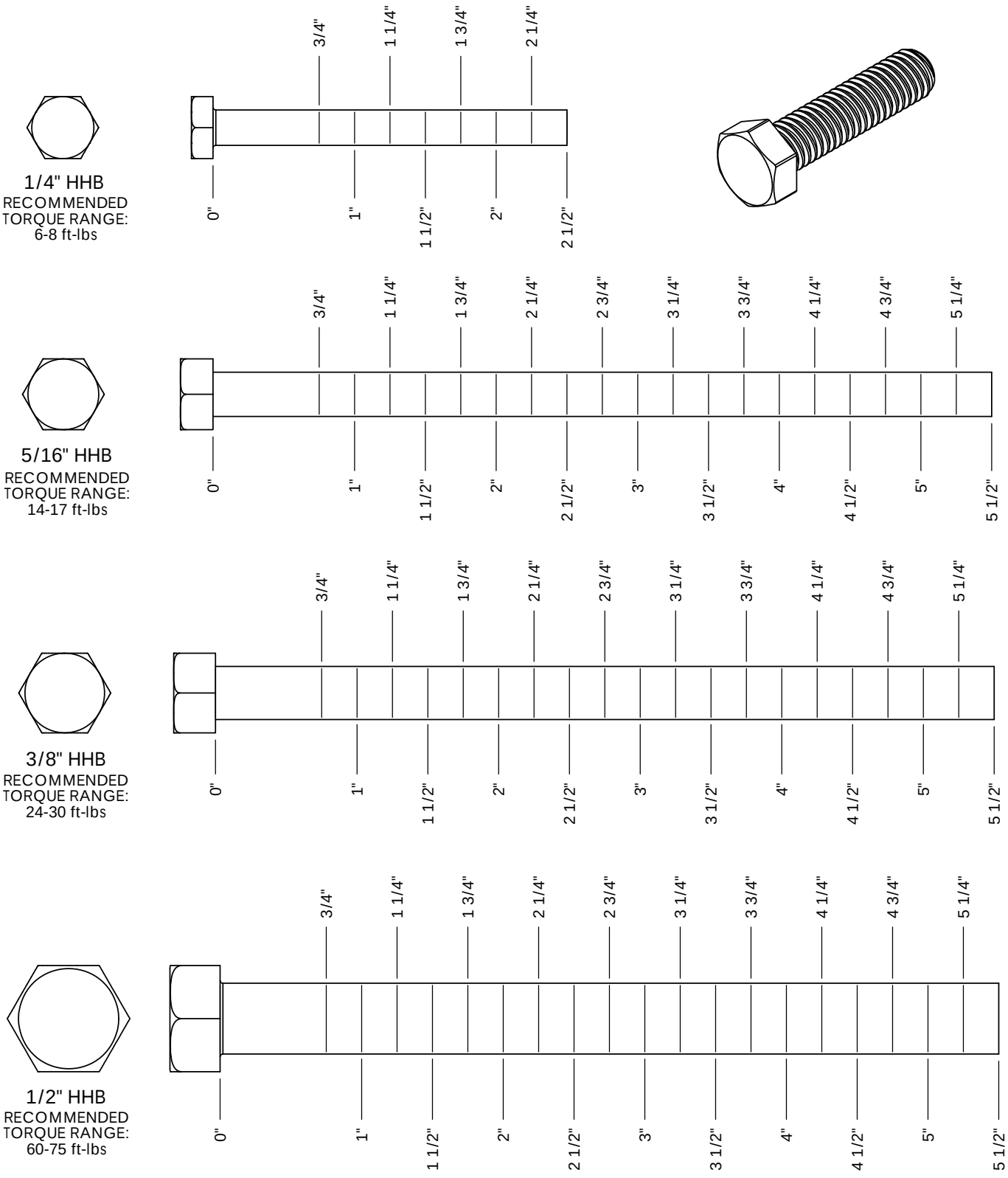

BOLT SIZING CHART

FLAT HEAD CAP SCREW

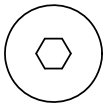

1/4" FHCS

RECOMMENDED TORQUE RANGE: 5-7 ft-lbs

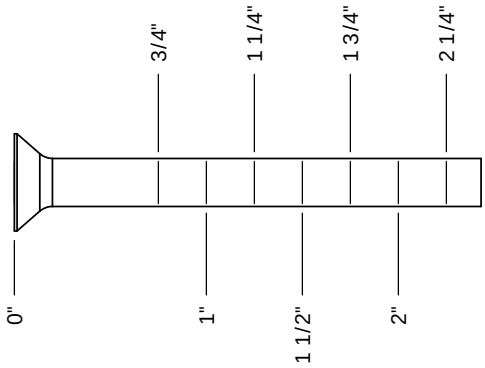

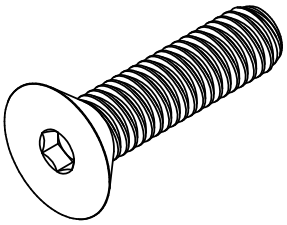

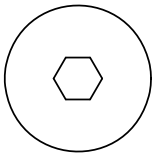

3/8" FHCS

RECOMMENDED TORQUE RANGE: 19-26 ft-lbs

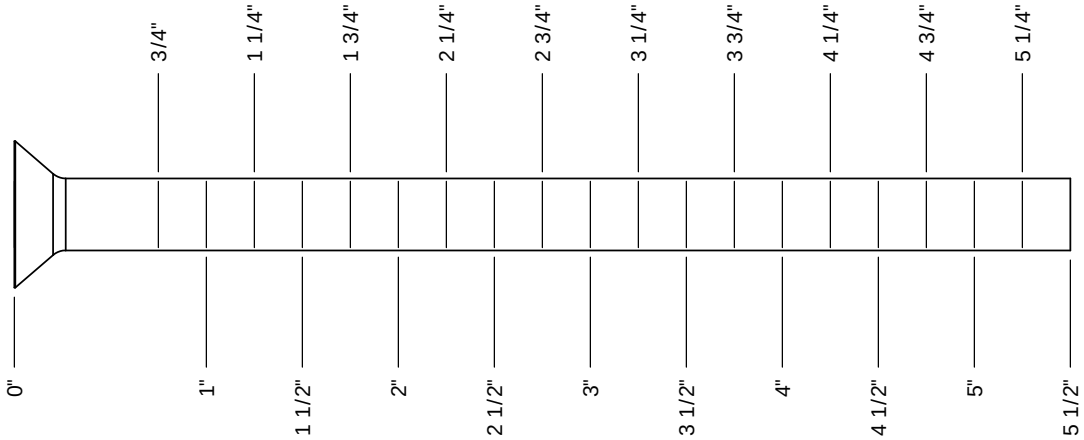

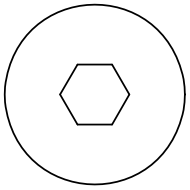

1/2" FHCS

RECOMMENDED TORQUE RANGE: 47-65 ft-lbs

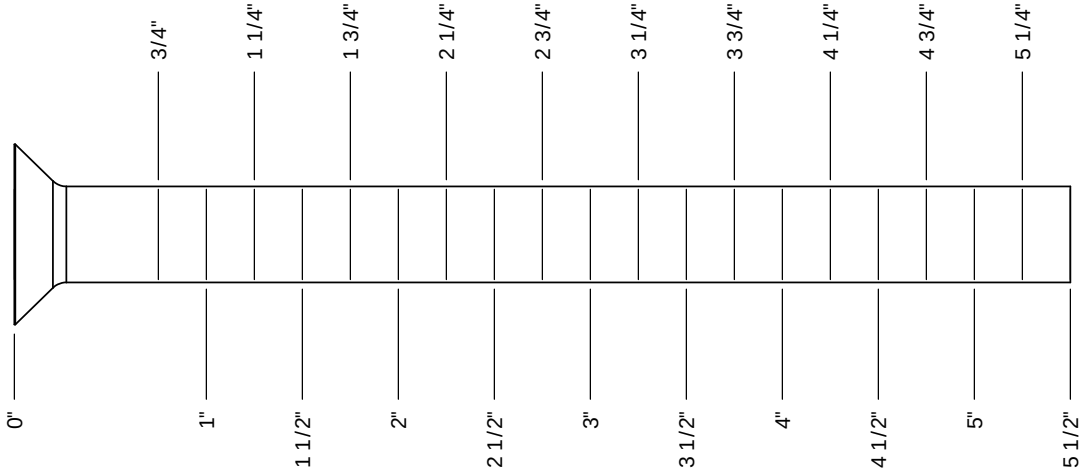

BOLT SIZING CHART

BUTTON HEAD CAP SCREW

1/4" BHCS
RECOMMENDED TORQUE RANGE: 5-7 ft-lbs

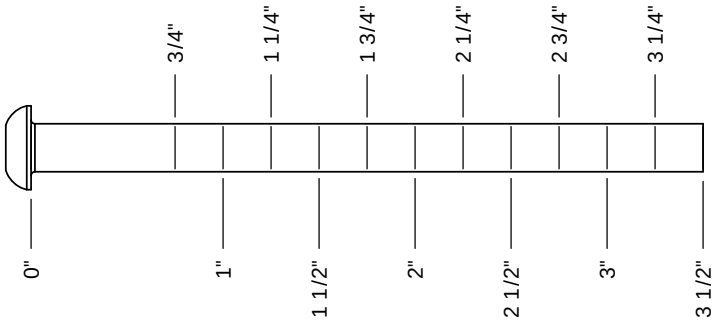

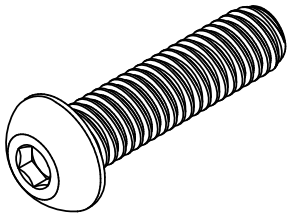

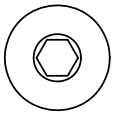

5/16" BHCS
RECOMMENDED TORQUE RANGE: 11-15 ft-lbs

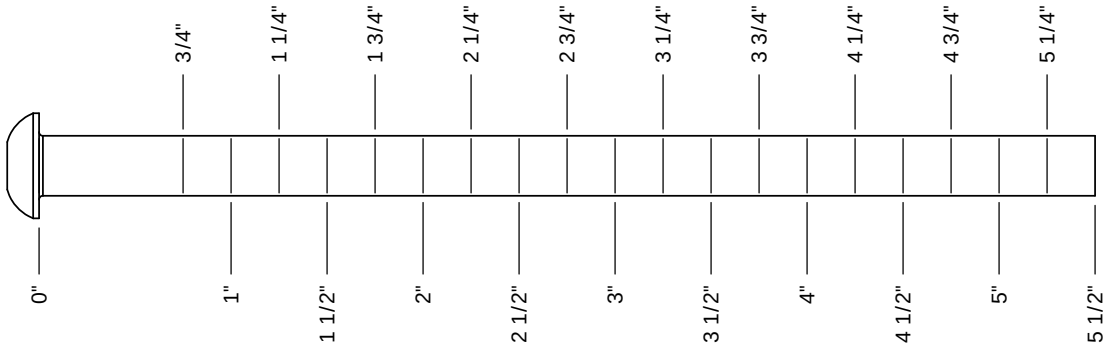

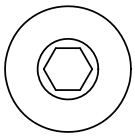

3/8" BHCS
RECOMMENDED TORQUE RANGE: 19-26 ft-lbs

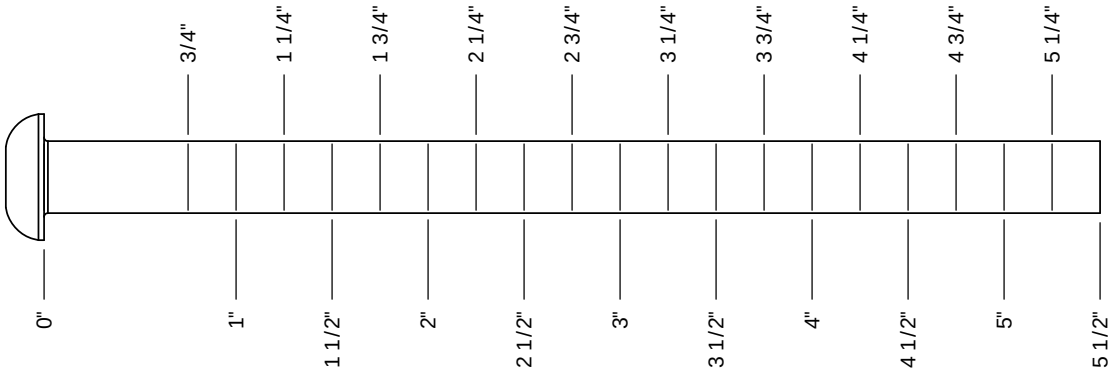

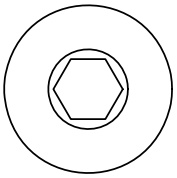

1/2" BHCS
RECOMMENDED TORQUE RANGE: 47-65 ft-lbs

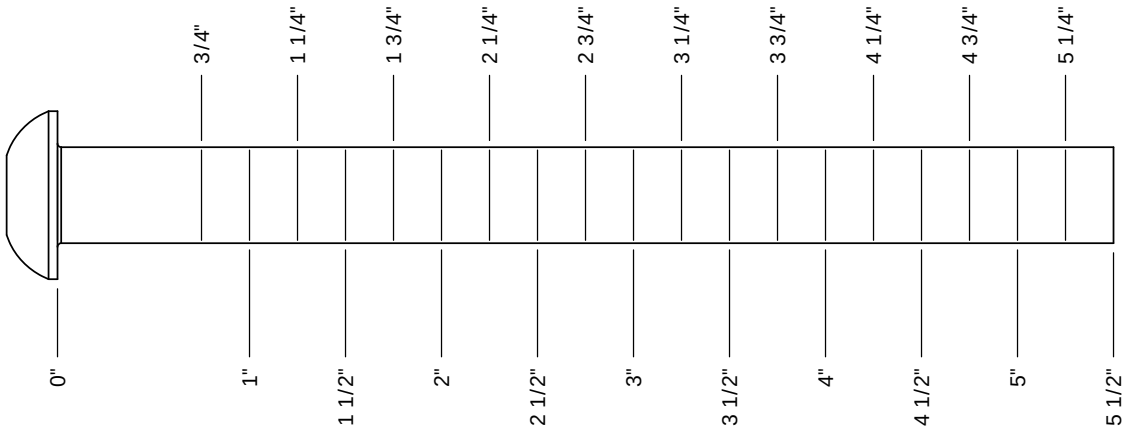

BOLT SIZING CHART

SOCKET HEAD CAP SCREW

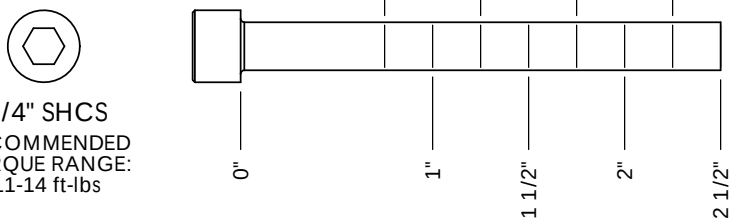

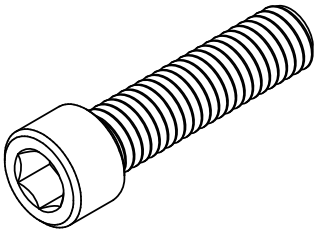

1/4" SHCS
RECOMMENDED TORQUE RANGE:
11-14 ft-lbs

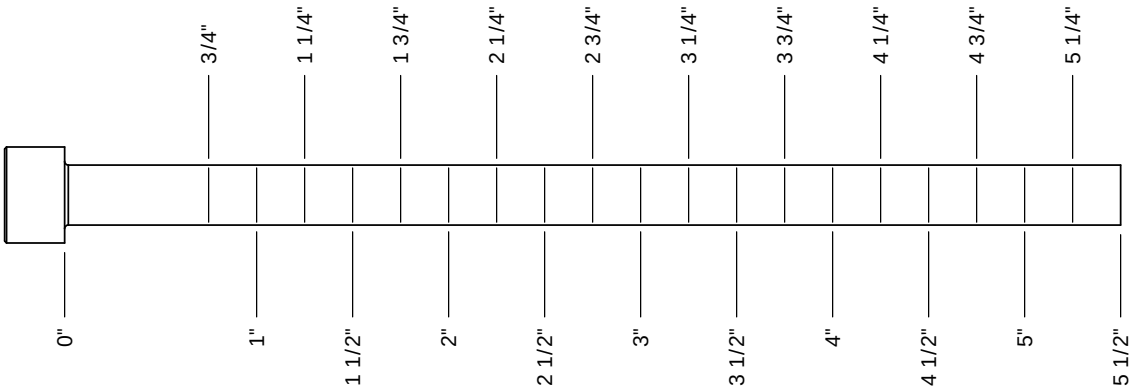

5/16" SHCS
RECOMMENDED TORQUE RANGE:
23-29 ft-lbs

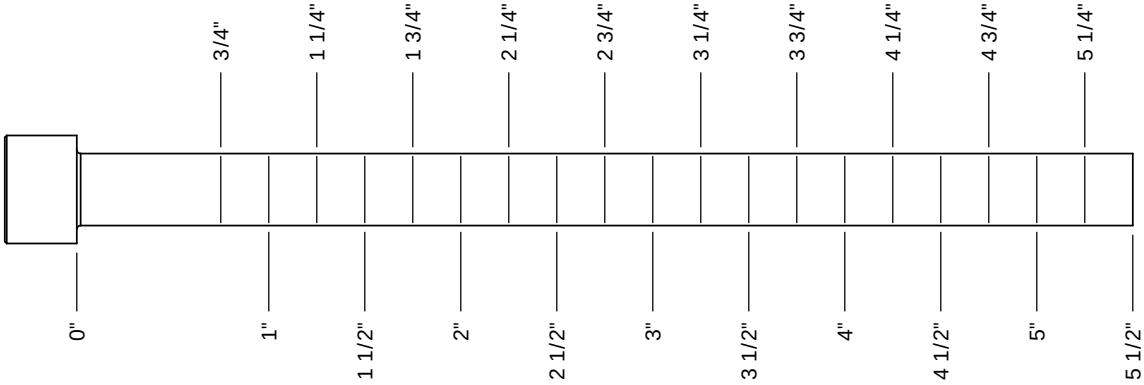

3/8" SHCS
RECOMMENDED TORQUE RANGE:
39-49 ft-lbs

BOLT SIZING CHART

LOW HEAD SOCKET HEAD CAP SCREW

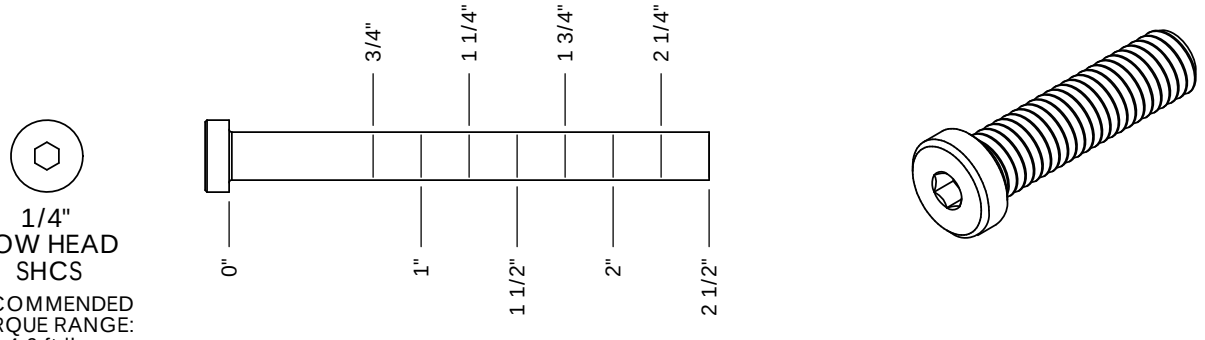

1/4"
LOW HEAD
SHCS

RECOMMENDED
TORQUE RANGE:
4-6 ft-lbs

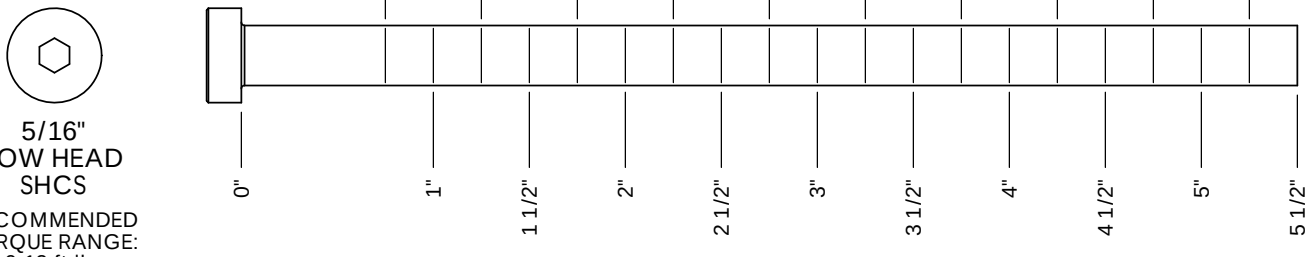

5/16"
LOW HEAD
SHCS

RECOMMENDED
TORQUE RANGE:
9-12 ft-lbs

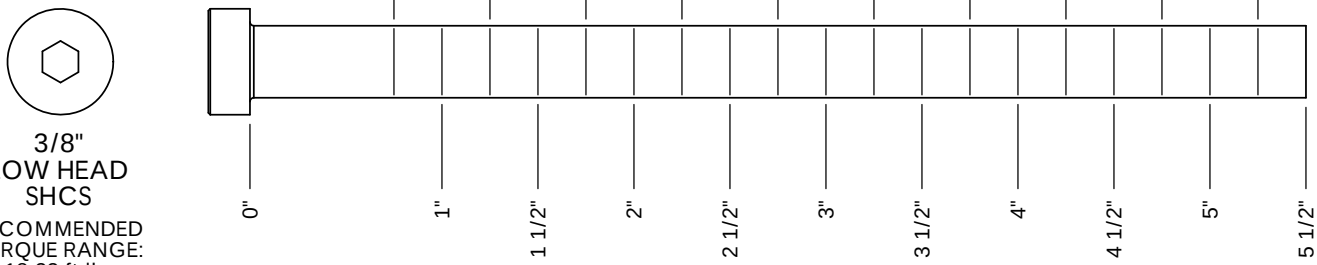

3/8"
LOW HEAD
SHCS

RECOMMENDED
TORQUE RANGE:
18-23 ft-lbs

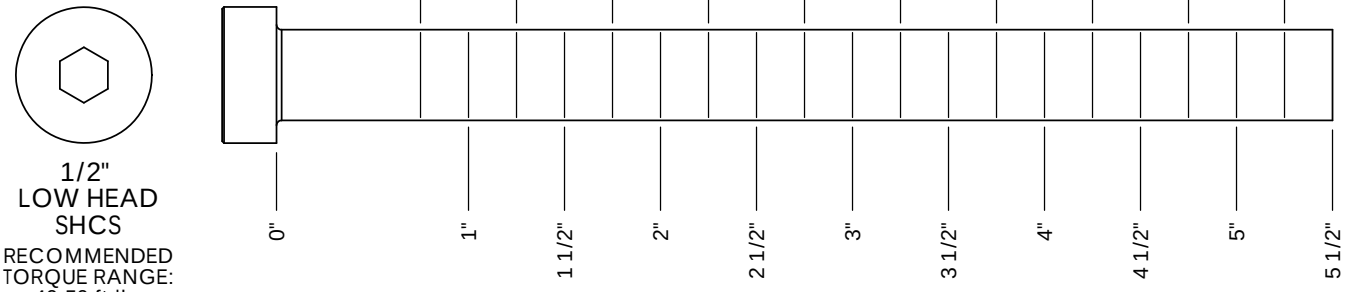

1/2"
LOW HEAD
SHCS

RECOMMENDED
TORQUE RANGE:
40-50 ft-lbs

BOLT SIZING CHART

SOCKET HEAD SHOULDER SCREW

1/4" SHSS
RECOMMENDED
TORQUE RANGE:
3-4 ft-lbs

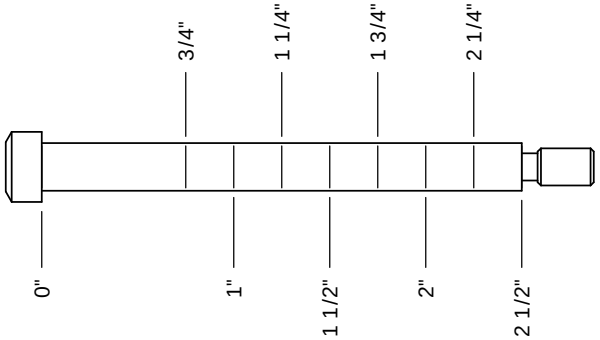

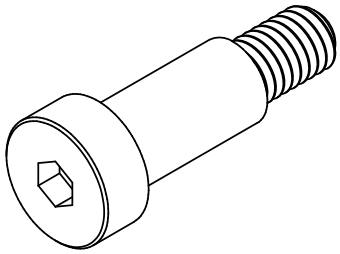

5/16" SHSS
RECOMMENDED
TORQUE RANGE:
8-10 ft-lbs

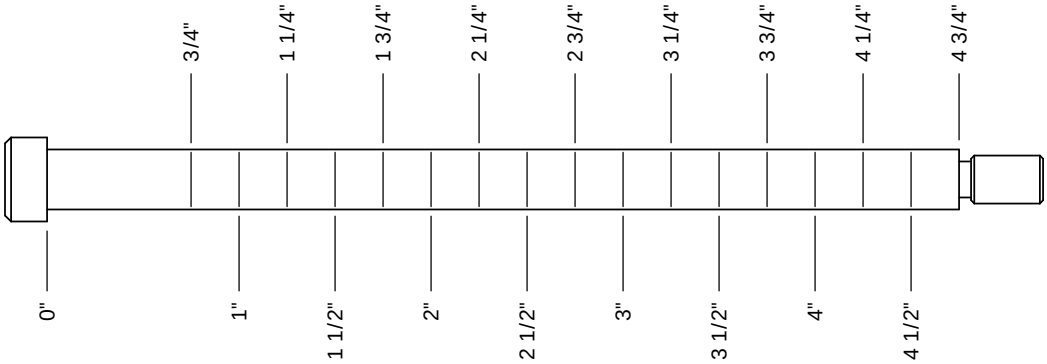

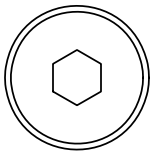

3/8" SHSS
RECOMMENDED
TORQUE RANGE:
17-22 ft-lbs

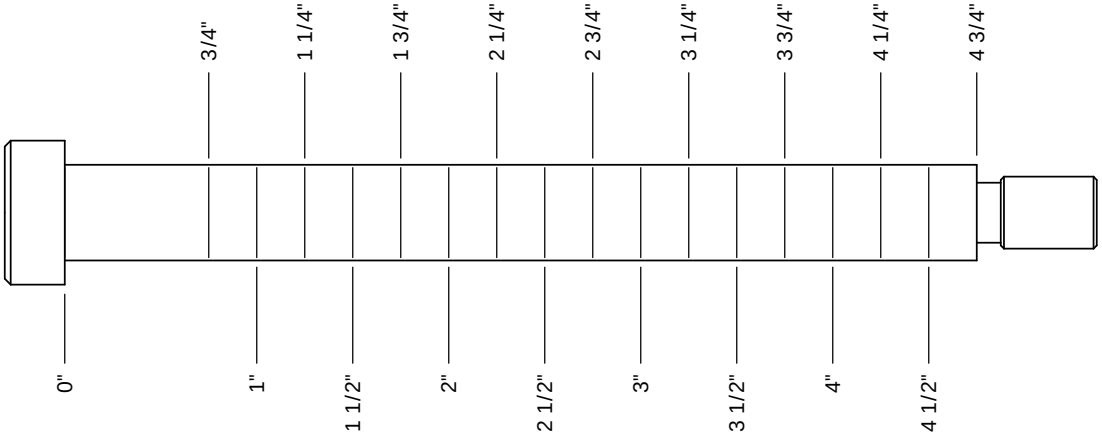

WASHER SIZING CHART

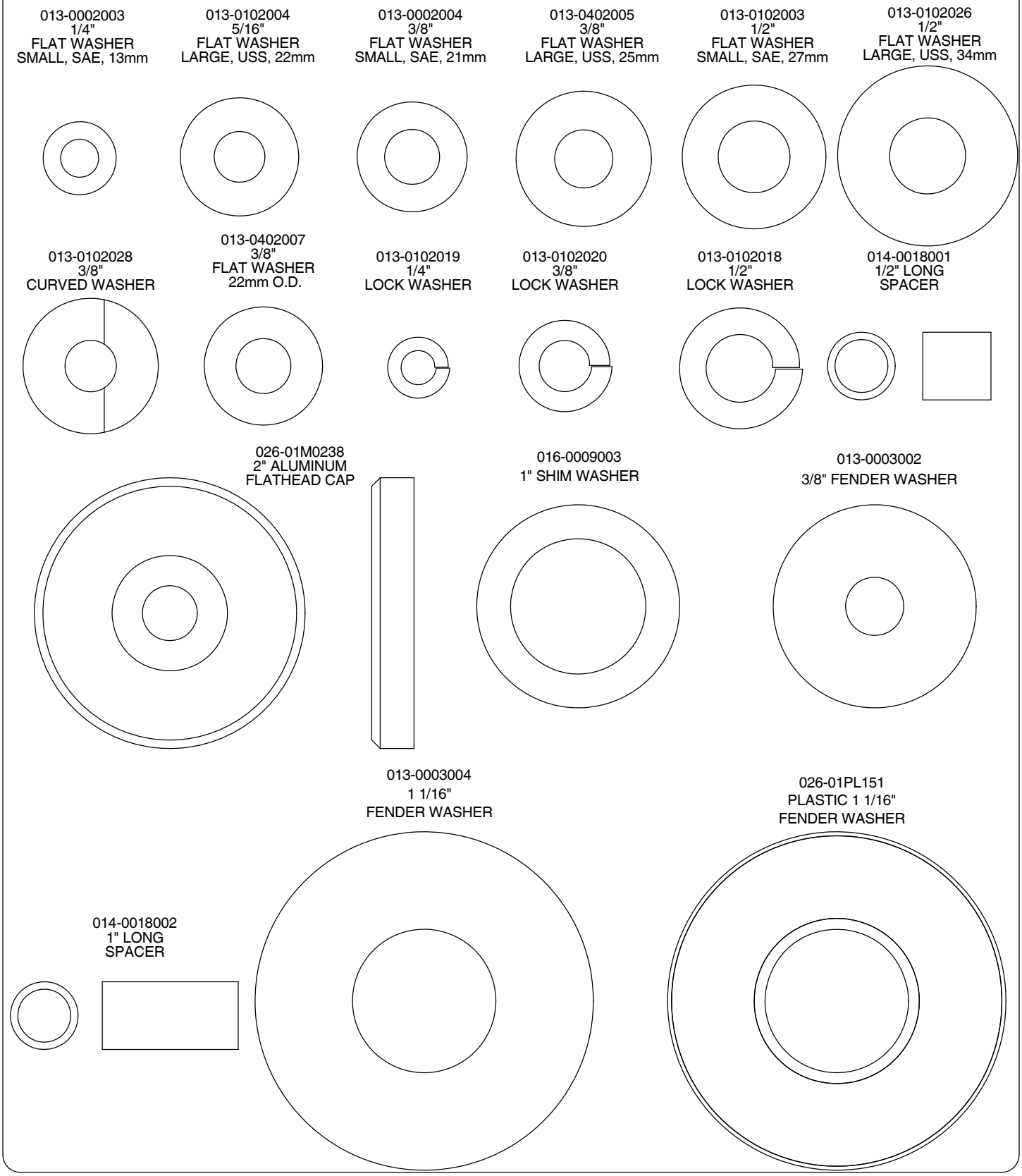

WASHER SIZING CHART
(CONTINUED)

026-01M0211
1/4" LONG
FLANGED SPACER

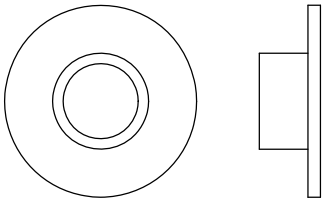

026-01M0198
1/2" LONG
FLANGED SPACER

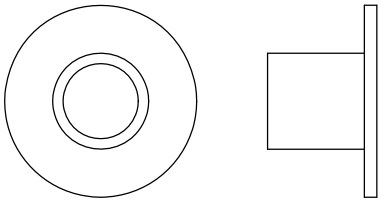

026-01M0760
1/2" LONG HEAVY
FLANGED SPACER

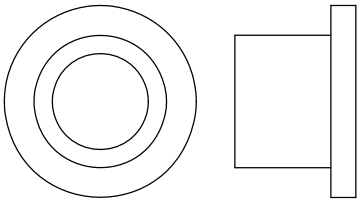

026-01M211T
1/4" LONG HEAVY
FLANGED SPACER

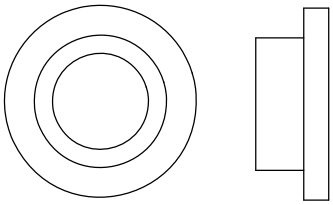

026-01M0532
11/16" LONG HEAVY
FLANGED SPACER

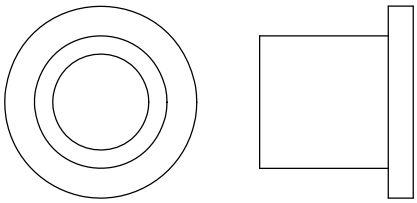

026-01M0551
1" LONG HEAVY
FLANGED SPACER

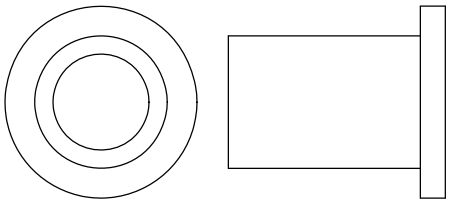

026-01M0788
.81" LONG HEAVY
FLANGED SPACER

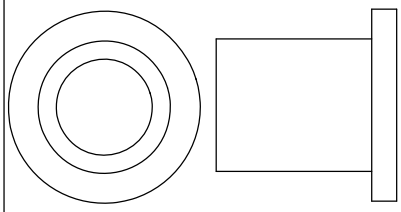

026-01M0780
.65" LONG HEAVY
FLANGED SPACER

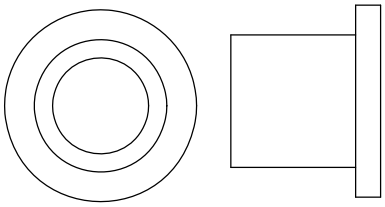

026-01M0761
1 11/16" LONG HEAVY
FLANGED SPACER

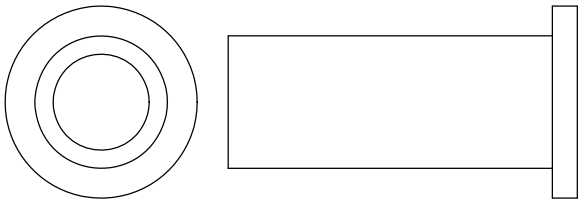

026-01M0789
.44" LONG HEAVY
FLANGED SPACER

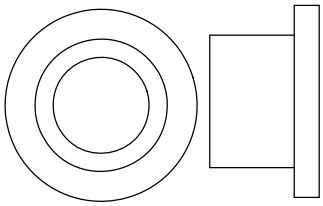

026-01M0762
1 1/2" LONG HEAVY
FLANGED SPACER

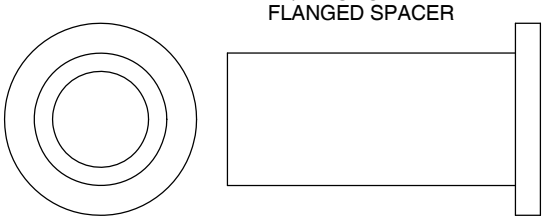

026-01M0768
1 1/4" LONG HEAVY
FLANGED SPACER

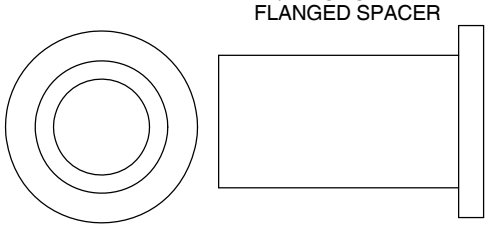

026-01M0600
.625" LONG
FLANGED SPACER

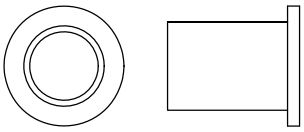

026-01M0240
1 3/8" ALUMINUM
FLATHEAD CAP

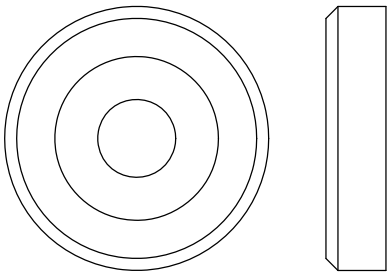

026-01M0239
1 5/8" ALUMINUM
FLATHEAD CAP

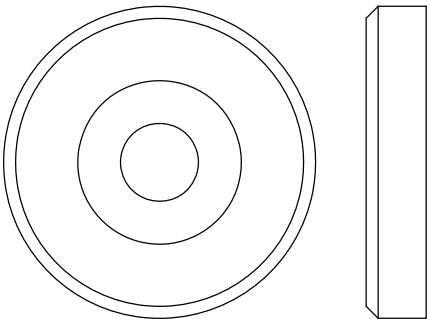

MAINTENANCE SCHEDULE

ROUTINE	COMMERCIAL / LIGHT COMMERCIAL MAINTENANCE	HOME MAINTENANCE	LATEST DATE ENTRY								
Inspect; Links, Pull Pins, Snap Locks, Swivels, Weight Stack Pins	DAILY	WEEKLY									
Clean; Upholstery	DAILY	WEEKLY									
Inspect; Cables or Belts and their tension	DAILY	WEEKLY									
Inspect; Accessory Bars, and Handles	WEEKLY	3 MONTHS									
Inspect; All Decals	WEEKLY	3 MONTHS									
Inspect; All Nuts and Bolts, Tighten if needed	WEEKLY	3 MONTHS									
Inspect; Anti-Skid Surface	WEEKLY	3 MONTHS									
Clean & Lubricate; Guide Rods with a Teflon (PTFE) based lubricant (Superlube)	MONTHLY	3 MONTHS									
Lubricate; Seat Sleeves, Turcite Bushings, Linear Bearing	MONTHLY	3 MONTHS									
Clean and Wax; All Glossy Finishes	6 MONTHS	YEARLY									
Repack with Grease; Linear Bearings	6 MONTHS	YEARLY									
Replace; Cables, Belts and Connecting Parts	YEARLY	3 YEARS									

Your equipment comes with a commercial maintenance decal.
For personal, in home use, please follow the home maintenance schedule listed above.

Never use ammonia, acid-based, or petroleum-based solvents on any portion of the machine as it may damage the finish.

HOIST FITNESS SYSTEMS
GENERAL MAINTENANCE INFORMATION

Links, Pull-Pins, Snap Hooks, Swivels, Weight Stack Pins:

*Check all pieces for signs of visible wear or damage.

*Check springs in snap hooks and pull-pins for proper tension and alignment.

*If the spring sticks or has lost its rigidity, replace it immediately.

Upholstery:

*To ensure prolonged upholstery life and proper hygiene, all upholstered pads should be wiped down with a damp cloth after every workout.

*Periodically take the time to use a mild soap or an approved vinyl upholstery cleaner to deter the onset of cracking or drying. Avoid using any abrasive cleaners or cleaners not intended for use on vinyl.

*Replace ripped or warn upholstery immediately.

*Keep sharp or pointed objects clear of all upholstery.

Decals:

*Inspect and familiarize yourself with any safety warnings or other user information posted on each decal.

Nuts and Bolts:

*Inspect all nuts and bolts for any loosening and tighten if needed.

*Go through a re-tightening sequence periodically to ensure that all hardware is tensioned proper.

Anti-Skid Surfaces:

*These surfaces are designed to supply secure footing and need to be replaced if they appear worn or become slippery.

Belts and Cables:

*Hoist uses only high quality belt, and mil-spec cables.

*Visually inspect the belts and cables for fraying, cracking, peeling or discoloration.

*While the machine is not in use, carefully run your fingers along the belt or cable to feel for thinning or bulging areas.

*Replace belts and cables immediately at the first signs of damage or wear. Do not use equipment until belts or cables have been replaced.

Belt and Cable Tension:

*Referring to the Owners Manual, when belts or cables are used check all bolts attachments to be sure they are properly attached.

*Check slack in cables and re-adjust cable tension if needed.

Seat Sleeves, Guide Rods:

*Wipe down adjusting tubes with a dust free rag before applying lubricant.

*Lubricate seat sleeves and Guide Rods with a Silicon or Teflon based lubricant spray.

Linear Bearings:

*Referring to the Owners Manual carefully disassemble the bearing from its housing and place a finger full of light grease (lithium, super lube, etc.) into the inside of the bearing. Using your finger, press the grease into the ball-bearings and their tracks. repeat until the ball-bearing tracks are full of grease. Insert the shaft back into the bearing and wipe off excess grease.

PLEASE KEEP THIS FOR YOUR RECORDS

WEIGHT TRAINING TIPS

Use this manual to guide you through the basic exercises you can perform on your HD-3800 HOIST® Fitness System. To gain maximum results and avoid possible injury, consult a fitness professional to develop your complete exercise program.

Always consult your physician before starting any exercise program.

To be successful in your exercise program, it is important to develop an understanding of the basic principles of strength training. Now that you have your HD-3800 HOIST® Fitness System, it is only natural that you want to get started immediately. First, determine a set of realistic goals and objectives for yourself. By deciding on an exercise plan that is right for you prior to starting, you will contribute significantly to your success.

Warm up properly before engaging in weight resistance training. Stretching, yoga, jogging, calisthenics or other cardiovascular exercise can help prepare your body for the heavier workload of lifting weights.

Learn how to perform the exercise correctly before using heavy weight. Correct form is important to avoid injury and to ensure that you work the proper muscle groups.

Know your limitations. If you are new to weight training or are embarking on an exercise regimen after a long layoff, start slowly and build foundational strength over a longer period of time.

Pay attention to your breathing. Exhale when you exert is a general rule of thumb. Never hold your breath.

Enjoy your HD-3800 HOIST® Fitness System!

WEIGHT TRAINING EXERCISE LOG

S = Sets R = Repetition per set W = Weight used

Date																																				
Exercise	S	R	W	S	R	W	S	R	W	S	R	W	S	R	W	S	R	W	S	R	W	S	R	W	S	R	W	S	R	W	S	R	W	S	R	W
Totals																																				

HOIST FITNESS SYSTEMS
LIMITED LIFETIME WARRANTY

Hoist Fitness Systems warrants this product to the **original purchaser** to be free from defects in workmanship and/or materials under normal use or service. If at any time a component part is defective, Hoist Fitness Systems shall repair or replace it (at Hoist Fitness Systems option) within a reasonable period of time. This warranty does not cover costs of removal, transportation or reinstallation. This warranty shall not apply if the defect was caused by misuse, neglect or normal wear and tear.

WARRANTY CLAIMS. All claims require: Model number, Serial number, Date of installation, and any information supporting the existence of the alleged defect.

To complete Warranty Registration visit:
www.HOISTFITNESS.com
and click on the Warranty Registration link

Starting from the original date of purchase, normal wear and tear shall be considered as the following:

COMMERCIAL USE: All malfunctions of upholstery, grips, and coatings that occur up to one year; all malfunctions of belts, or cables up to one year; all malfunctions of pulleys, bearings, or bushings that occur up to three years. The frame and body components are warranted for ten years, with structural moving parts warranted for five years.

LIGHT COMMERCIAL USE: All malfunctions of upholstery, grips, and coatings that occur up to one year; all malfunctions of belts, or cables up to one year; all malfunctions of pulleys, bearings, or bushings that occur up to three years. The frame and body components are warranted for ten years, with structural moving parts warranted for five years.

HOME USE: All malfunctions of grips, paint, and chrome that occur up to ten years; all malfunctions of electronic components, belts, cables, or upholstery that occur up to ten years; all malfunctions of pulleys, bearings, or bushings that occur up to ten years. The frame and all welded components are warranted for the life of the product.

PLEASE NOTE THAT NOT ALL HOIST PRODUCTS ARE MADE FOR COMMERCIAL USE. Refer to the instructions page of your owners manual or consult with you fitness product dealer to establish if a product is made for commercial use or not. Using a non-commercial product in a commercial setting can result in serious injury or death! Hoist Fitness Systems sole responsibility shall be to repair or replace the component within the terms stated above. Hoist Fitness Systems shall not be liable for any loss or damage of any kind including any incidental or consequential damages resulting, directly or indirectly from any warranty expressed or implied or any other failure of this product.

LIGHT COMMERCIAL USE: Our Light Commercial warranty applies to facilities that **DO NOT** charge monthly membership dues and where the equipment would be used by **no more than 50** people per day. Examples of Light Commercial facilities include hotels, apartment complexes, personal training studios, fire stations, police stations, etc., that meet the criteria stated above.

WHAT IS NOT COVERED BY THIS WARRANTY: Hoist's sole obligation under this warranty is limited to either repair or replacement of parts, subject to the additions below. This warranty neither assumes nor authorizes any person to assume obligations other than expressly covered by this warranty.

NO CONSEQUENTIAL DAMAGES: Hoist is not responsible for economic loss; profit loss; or special, indirect, or consequential damages.

WARRANTY IS NOT TRANSFERABLE: This warranty is not assignable and applies only in favor of the original purchaser/user to whom delivered. Any such assignment or transfer shall void the warranties herein made and shall void all warranties, expressed, implied or statutory, except the one (1) and five (5) year warranties described above. These warranties are exclusive and in lieu of all other warranties, including implied warranty and merchantability or fitness for a particular purpose. There are no warranties which extend beyond the description on the face hereof.

TRANSPORTATION COSTS: Hoist will accept parts covered under this warranty freight collect, provided that shipment has received prior approval. Hoist is not responsible for any other transportation costs, but will ship freight collect parts either repaired or replaced under these warranties.

Hoist Fitness Systems
11900 Community Rd.
Poway, CA. 92064
(800)548-5438

PLEASE KEEP THIS FOR YOUR RECORDS